GRADY-WHITE BOATS

Dear Grady-White Owner:

Welcome aboard!

Buying and owning a boat is a very special experience. Of all the many products you'll ever own we want your Grady-White experience to be the absolute best. That means providing the descriptions, explanations and technical support that you need to enjoy your Grady-White with confidence and security.

Your Grady-White exceeds all US Coast Guard safety standards and is built to standards certified by the National Marine Manufacturers Association (NMMA). Best of all, your boat is built to Grady-White standards—standards that have served our owners through some truly extraordinary conditions since our first models built in 1959.

The seaworthiness and safety of your Grady-White is highly dependent on the operation, maintenance and care of your boat, so please read this manual thoroughly and keep it around for reference. If you need further explanation or "hands-on" help, don't hesitate to ask the people at your Grady-White dealership; they have experience with the systems and operations of your boat. If for any reason you need additional help, please feel free to call us at the factory. We sincerely want to provide you with the help and information that will make your Grady-White experience delightful.

Thanks for choosing a Grady-White. All of us at the factory and at your dealership are dedicated to earning your confidence in Grady-White Boats. Again, welcome aboard.

Sincerely yours,

Kris Carroll

President

Grady-White Boats, Inc.

Grady-White Boats, Inc.
5121 Martin Luther King Jr. Hwy, Greenville, NC 27834 • P.O. Box 1527 • Greenville, NC 27835-1527
Tel: 252-752-2111 • Fax: 252-752-4217 • http://www.gradywhite.com

Chapter 1: Consumer Information

Owner's Packet 1-1
Warranty Information 1-1
Dealer's Responsibilities 1-1
Consumer Responsibilities 1-2
Hazard Warning Labels 1-3

Chapter 2: Safety

Minimum Required Safety Equipment 2-1
Additional Recommended Equipment 2-1
Registration Numbers 2-2
Emergency Stop Switch 2-2
Emergency Information 2-2
Boating Safety 2-3
Certification 2-4
Loading Capacity 2-5
Carbon Monoxide 2-5
Propeller Safety 2-7
Suggested Boating Classes And Reading Material 2-7

Chapter 3: General Information

Fueling 3-1
Environmental Protection Agency 3-2
Pollution Regulations 3-2
  Discharge of Oil or Hazardous Substances 3-2
  Disposal of Plastics or Garbage 3-3
Predeparture 3-3
Casting Off and Approaching The Dock 3-3
Reboarding Ladders 3-3
Anchoring 3-4
Towing 3-4
Shallow Water 3-5
General Information On Boat Handling 3-6
Commonly Used Nautical Terms 3-7

Chapter 4: Performance

Performance Factors 4-1
  Engine Efficiency 4-1
  Weather Conditions 4-1

Load Distribution 4-1
Marine Growth 4-1
Trim 4-1
Propeller 4-2
Outboard Engines 4-2
Steering 4-3
Throttle/Shift Controls 4-3

Chapter 5: Instrumentation and Switches

Yamaha Instrumentation Panel 5-1
Yamaha CL7 Command Link Display (Full Maneuverability Package) 5-1
Helm Master EX™ 5-3
DEC Controls 5-3
Digital Electric Steering (DES) 5-4
Autopilot 5-4
Full Maneuverability 5-4
Switch Panel 5-5

Chapter 6: Maintenance and Service

General 6-1
Exterior Fiberglass Finish 6-1
Maintenance 6-1
Cleaning 6-1
Finish/Waxing 6-2
Repairing 6-2
Bottom Paint 6-3
Canvas 6-3
Maintenance of Canvas 6-3
Snaps and Zippers 6-4
Vinyl 6-4
Upholstery 6-4
Polyethylene/Acrylic/Vinyl 6-4
Scuppers 6-4
Seachest 6-5
Caulking/Gasket 6-5
Hardware/Stainless Steel Rails 6-5
Hardware Mounting 6-5
Aluminum Components 6-6
Fuel System 6-7
Fuel Tank Compartment 6-11
Shower Sump 6-11
Batteries 6-11

LED Lighting 6-12
456 DC Accessory Wiring Color - Fuse/Breaker 6-13

Chapter 7: Winterization and Storage

General 7-1
Boat Storage 7-1
Cleaning And Lubricating 7-2
Draining And Water System 7-2
Head System 7-2
Batteries 7-3
Engines 7-3
Engine Flushing System 7-3
Fuel System 7-3
Storage Checklist 7-3
Getting Boat Out After Storage 7-4
Prior To Launching 7-4
After Launching 7-4

Chapter 8: Canyon 456

Specifications 8-1
CZone Switching 8-1
General Layout and Operation 8-1
Transferring AC Power 8-2
Monitoring 8-3
AC Powered Accessory Switches 8-3
DC Powered Accessory Switches 8-4
Helm Switch Panel 8-6
Raw Water Systems 8-8
Seachest 8-8
Seacocks 8-8
Air Con/Cooler Box Pump 8-8
Air Conditioners 8-9
Generator 8-9
Generator Control Panel 8-9
Generator Cover 8-10
Livewells 8-11
Raw Water Washdown 8-11
Seakeeper 8-11
Auxiliary Fuse Blocks 8-12
Accessory Outlet - 12 Volt 8-12
Anchor Windlass 8-12
Battery Chargers 8-12

Battery Select Switch 8-13
Bilge Pump/Float Switch 8-13
Bilge Pump Locations 8-14
Bow Thruster 8-14
Cabin Lights 8-14
Carbon Monoxide Detector 8-14
Cockpit Freshwater Showers 8-15
Compass 8-15
Cockpit Cooler System 8-15
Downrigger Outlets 8-15
Engine Flushing System 8-16
Fender Holders 8-16
Freshwater System 8-17
Forward Freshwater Washdown 8-17
Grill 8-17
Head Shower 8-18
High Bilge Water Alarm 8-18
Main Circuit Breaker 8-18
Microwave 8-19
Outlets 8-19
Refrigerator 8-19
Scanstrut Charger 8-19
Shore Power 8-19
Connecting The Shore Power 8-20
Disconnecting The Shore Power 8-20
Shower Sump 8-21
Shore Water 8-21
Steering 8-21
Stereo 8-21
TV/HDMI 8-22
Hardtop Enclosure 8-22
Trim Tabs 8-22
USB Charging Outlets 8-23
Vacuflush® Head System 8-23
Deck Pump-out 8-23
Overboard Discharge 8-23
Service Mode 8-24
Water Heater 8-24
Windshield Washer Solenoid 8-24
Operation Of Optional Features 8-25
Bow Shade 8-25
Outriggers 8-25
Safety Labels and Location 8-27

Chapter 9: Limited Warranty

Registration Of Purchase 9-1
Five Year Hull Transferable Warranty 9-1
One Year Material And Workmanship Warranty 9-1
Warranty Claim Procedures 9-2

CHAPTER 1: CONSUMER INFORMATION

Owner's Packet

Your Grady-White has many features and accessories that have existing printed material provided by the various equipment manufacturers. This information is compiled in a package that we will reference throughout this manual as an "Owner's Packet." This Owner's Packet includes a Grady-White Owner's Manual and Engine Manual to advise on operation, service, specifications, maintenance, warranty, and other useful facts. While reading your Grady-White manual, you will find other technical literature referenced as resources for detailed information. The Owner's Packet will also consist of operation guides, informative labels, and product warranties you will need to be acquainted with. Your Owner's Packet can also be used to retain instructions and data compiled on additional equipment and accessories installed after delivery. To the extent that any other information in the Owner's Packet is inconsistent with the Grady-White owner's manual for your boat, the owner's manual takes precedence.

Sportfish, Cruisers, Yachts Owner's Manual, a book published by the National Marine Manufacturer's Association (NMMA), has been included with your Owner's Manual as a supplement. This publication will be referenced in your Grady-White Owner's Manual to present additional instructions and information on basic boating.

Warranty Information

The Grady-White warranty is located in the last chapter of this manual. **Upon the purchase of your new Grady-White Boat, the dealer will submit the required warranty information to the factory.** For questions regarding your warranty please contact your dealership.

Dealer's Responsibilities

Throughout the fabricating and assembly processes, your Grady-White has undergone a series of strict inspections. Subsequent to the final factory overview, your dealer must perform additional pre-delivery checks and approve your Grady-White for delivery.

Dealer Responsibilities Include Providing The Following:

- An orientation of the general operation of your Grady-White.
- Submitting the required warranty information to Grady-White Boats to validate the warranty.
- An explanation of safety issues regarding the use of containment systems and components.
- A complete Owner's Packet containing literature and information regarding your Grady-White and its separate warranted products' operation, installation, and maintenance instructions.

- A review of all warranties for engines and accessories that are separate from or in addition to the Grady-White warranty.
- Guidance on acquiring local and out of area service during and out of warranty periods.

Consumer Responsibilities

The following are responsibilities of the Grady-White owner:

- Read and understand the express limited warranty.
- Study in detail all literature and instructions enclosed, and use all equipment in accordance.
- Examine the boat and confirm all systems are working suitably at the time of accepting delivery.
- Render proper maintenance and periodic servicing of the boat in accordance with suggestions in the Owner's Manual and Packet.
- Return the boat to the selling dealer for an engine inspection. Refer to the engine's owner's manual for the proper maintenance schedule.

Grady-White Boats has a permanent record of your boat which is retained under its "**H**ull **I**dentification **N**umber" (HIN). Data regarding equipment and accessories, as well as dealer/shipping information is documented. When contacting your dealer concerning warranties or service, please have all relevant information such as serial numbers (HIN) and model number available.

The "**H**ull **I**dentification **N**umber," located on the starboard side of the transom, is a significant source of identification and must be noted in all correspondence and orders. Failure to include the HIN only creates delay.

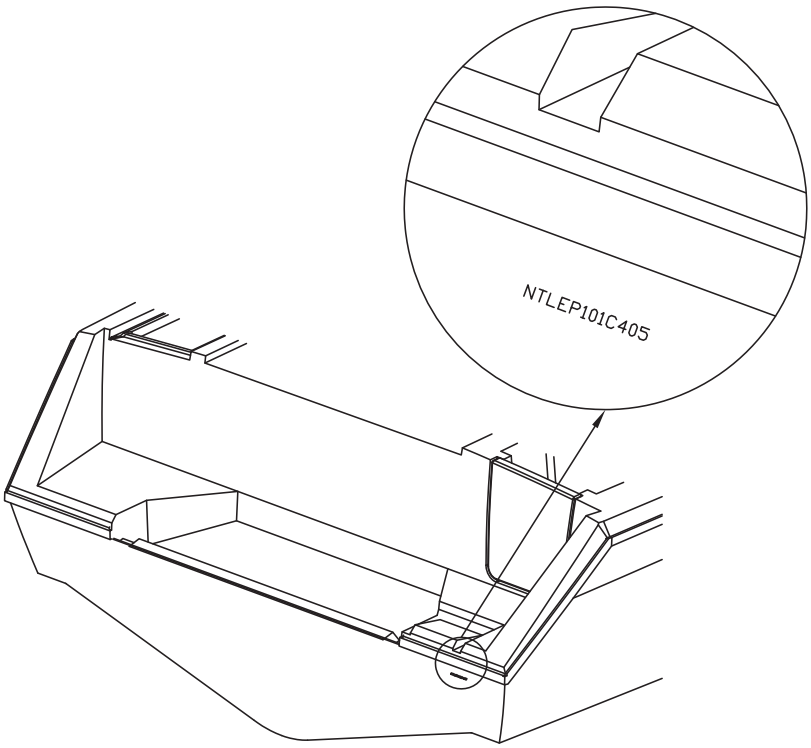

Hazard Warning Labels

The hazard warning labels shown below are applied throughout this manual to alert the customer of potentially dangerous situations that can lead to death, personal injury, and/or product damage. We urge you to observe these warnings and comply with all safety recommendations.

⚠ DANGER
This symbol alerts you to imminently hazardous situations which WILL cause severe personal injury or death if the warning is ignored.

⚠ WARNING
This symbol alerts you to potentially hazardous situations or unsafe practices that COULD result in severe personal injury or death if the warning is ignored.

⚠ CAUTION
This symbol alerts you to potentially hazardous situations that MAY result in minor personal injury or cause product or property damage if the warning is ignored.

NOTICE
This symbol calls attention to installation, operation, or maintenance information which is important for proper operation, but is not hazard related.

CHAPTER 2: SAFETY

Minimum Required Safety Equipment

The US Coast Guard (USCG) requires that every boat have specific equipment on board. Check with local regulations on mandatory equipment apart from the list of Coast Guard requirements. See *Sportfish, Cruisers, Yachts Owner's Manual*, page 23, for details on the following minimum required safety equipment.

- **Fire Extinguisher**
  Boats should be equipped with marine approved fire extinguishers.
- **Personal Flotation**
  All passengers must have an USCG approved personal flotation device (PFD). The Coast Guard requires children under 13 years old and not within an enclosed cabin below decks to wear a PFD on a boat that is underway. The laws of your state may be more stringent. It is your obligation to know and comply with the PFD laws and regulations applicable *in the states in which you operate*.
- **Children and non-swimmers are advised to wear a PFD at all times.**
- **Sound Signaling Device (Horn, Bell Or Whistle)**
  Your Grady-White is equipped with a horn that meets USCG requirements.
- **Visual Distress Signals**
  USCG approved visual distress signals are required on U. S. waters. See page 42 of the pamphlet *Sportfish, Cruisers, Yachts Owner's Manual* enclosed with this manual for more information.
- **Lighting**
  Grady-White boats are equipped with navigational lights that meet requirements for recreational vessels for inland and international waters.

Additional Recommended Equipment

In addition to the required safety equipment, there are additional items that will provide an extra margin of safety and convenience for you and your passengers while boating. For an extended list of basic gear, tools and spare parts, reference page 24 of the pamphlet *Sportfish, Cruisers, Yachts Owner's Manual* enclosed with this manual.

Keep tools and spare parts in good condition. Replace parts removed from the spare parts kit. Most importantly, use US Coast Guard approved or marine certified parts where applicable. Conditions found requiring corrective action should be worked on by a qualified repairman.

Registration Numbers

Federal and State laws require a powerboat to be registered in the State where it is primarily used. Registration numbers and validation stickers must be displayed according to regulations.

The registration certificate must be on board when boating. The boat serial number or Hull Identification Number (HIN, page 1–2) is required on the registration form. The HIN is located on the upper right hand corner of the transom, and is the most important identifying factor. The HIN should be included in all documents and correspondence to provide you timely service.

Emergency Stop Switch

All Grady-Whites are equipped with an emergency stop switch. This is a safety feature that if used properly will shut the engine(s) down if the operator leaves or falls from the helm position. The ignition shutdown system includes a shut-off switch, switch clip, lanyard and lanyard clip. The lanyard clip must be attached to the operator. If a situation arises where the boat needs to stop, a pull on the cord to release the clip from the shut-off switch will shut down the engine(s). To reset the emergency stop switch, simply reinstall the switch clip. The USCG requires that operators of vessels less than 26 feet use the emergency stop switch while underway. Although the federal requirement applies to certain size vessels, Grady-White recommends the use of the emergency stop switch while underway on all boats regardless of size. See page 82 in *Sportfish, Cruisers, Yachts Owner's Manual*.

Emergency Information

While boating, dangerous situations may develop. You should prepare yourself on how to cope with them whether they happen aboard your vessel or someone else's. Anticipate and plan for specific situations such as fire, man overboard, collision, etc. to give you the confidence and ability necessary to handle an emergency. The key is to remain calm. For emergency procedures, see Section 4 in *Sportfish, Cruisers, Yachts Owner's Manual*.

- **Rendering Assistance**
  The owner or operator of a vessel is required by law to render all practical or necessary assistance to any person or vessel affected by collision, accident or casualty. **However, you are not required to endanger your vessel or passengers to render assistance.**
- **Accident Reporting**
  Report all boating accidents to your local authorities. Federal regulations require boat operators involved in an accident to submit a written report within 48 hours. **In the event of death or disappearance, notification is required immediately** by phone or radio in addition to the written report. These reports can be submitted to the State Boating Law Administrator. Forms can be obtained through the USCG, local harbor patrol offices, sheriff, and police stations.

- **Lightning Precautions**
  This awareness is included to ensure the safety of the owner and passengers. Always be mindful of the weather! When a lightning storm advances, certain safety precautions should be taken. Dock the boat and seek shelter on land. If this is not possible, seek refuge inside the boat until the storm has passed. **Stay out of the water!** Lightning will seek a ground when it strikes and may pass through metal components if it hits your boat. For this reason, avoid contact with metal parts of the boat under these conditions.

Boating Safety

Safety is an important aspect of boating. Your safety as well as the safety of your passengers and vessel is your responsibility. The following precautions and the ones mentioned in section 1 of *Sportfish, Cruisers, Yachts Owner's Manual* will add to you and your passengers' boating safety and pleasure.

- Before operating your Grady-White **read and study all operation and maintenance manuals**. It is important that you fully understand how to use your boat. Contact your Grady-White dealer for questions. Proper use and service will insure quality performance and longevity of your boat, and help ensure your safety, as well as the safety of your passengers.
- A written float plan left with a **responsible** person can serve as valuable information should you not return as scheduled. Upon returning, your primary responsibility is to notify the person of your return.
- **Never** operate or allow anyone to operate your boat while under the influence of drugs or alcohol.
- **Individuals under the age of 16 should not be allowed to operate your boat. Inexperienced drivers should have constant and direct supervision.**
- Instruct at least one passenger on the fundamentals of basic boating and safe operation in the event of an emergency.
- While boating, passengers should be located in a safe position. Use hand holds and rails for steadiness. Do not allow bow, transom or gunwale riding. The captain is ultimately responsible for their passenger's safety.
- Keep your boat speed under control. Respect for other boaters and those on shore are common courtesies. The boat's operator is responsible for injury or damage caused by the boat or the wake. Your wake could swamp a smaller craft and endanger its passengers. Stay alert for posted **"No Wake Zones"**.
- Become familiar with the handling personality and limitations of your boat.
- **Never allow swimmers/skiers to enter or exit the boat with engine(s) running**. A shift lever in neutral could become engaged accidentally. Also, exhaust fumes from the outboard engine(s) contain carbon monoxide gas. These fumes may concentrate in this area. *See more information on "Carbon Monoxide" on page 2-5*.
- Obtain information and a chart for new areas when possible.

- Clean water and air are responsibilities for all persons. Use litter containers on board and dispose of refuse properly. *See "Pollution Regulations" on page 3-2*.
- Know and obey the "Rules of the Road". See *Sportfish, Cruisers, Yachts Owner's Manual*, beginning on page 25, for a better understanding of right of ways, signals and waterway markers.
- **Inclement Weather**
  On the water, the weather can change rapidly. Always be mindful of changing weather and sea conditions as these can impact the safe operation of your vessel, and the safety of your passengers.

Certification

This label means your Grady-White is certified by the National Marine Manufacturers Association (NMMA). With this tag, you are assured the fuel system, electrical system, navigation lighting, ventilation, steering and other design elements are not only in compliance with the US Coast Guard regulations, but also meet the more stringent standards of the NMMA. The NMMA is a national trade organization serving all elements of the recreational boating industry including manufacturers of boating equipment. With this tag, you can have confidence in the safety of your boat.

This label means that Grady-White has designed and built your boat to the ABYC standard H-8, buoyancy in the event of swamping. Basic flotation is defined as having enough foam in the boat to create buoyancy and prevent sinking under swamped conditions.

At the helm station you will find a NMMA Yacht Certification tag. This means your yacht complies with the Coast Guard safety standards. (NOTE: Any boat with an overall length of 26 feet or greater is defined as a "yacht" by NMMA.)

Loading Capacity

Though overloading is a primary cause of many boating accidents, improper loading is equally hazardous. Boaters should know the amount of weight on board and evenly distribute the weight within the boat.

Carbon Monoxide

⚠ WARNING

CO is produced by all combustion engine(s) and generator sets.
Avoid brain damage or death from carbon monoxide.
Keep cockpit and cabin areas well ventilated.
Avoid blockage of exhaust outlets.
Signs of exposure include headache, nausea, dizziness and drowsiness.

Carbon Monoxide, commonly written CO, is a colorless, odorless gas emitted from any boat's exhaust. The gas is similar in weight to the air we breathe. Therefore, it cannot be expected to rise or fall, but will accumulate in confined spaces.

Carbon monoxide is **poisonous**, and potentially **fatal** if breathed over an extended period of time. Symptoms of CO poisoning include dizziness, nausea, headache, sleepiness, vomiting, throbbing in the temples, muscular twitching, and an inability to think clearly. **If you or anyone else experience these symptoms, immediately get away from fumes and into an area where plenty of fresh air can be consumed. If any symptoms from above persist, seek medical attention.**

Carbon monoxide can accumulate in cabins and under enclosures and canvas. Maintain access to fresh air when occupying these areas with the engines or generator running.

Outboard engine exhaust fumes contain carbon monoxide. These fumes may concentrate at the motorwell area. Do not board your vessel at the transom ladder with the engine(s) running. Also, do not occupy the motorwell area with the engine(s) running.

Operators need to be aware of the influence of other boats on their vessel as well as the effects they have on neighboring crafts. Of primary concern is the operation of an auxiliary generator with boats moored along side each other. This situation creates an atmosphere which is filled with CO, and extremely dangerous. If your CO detector alarm sounds, indicating CO is present, immediately remove yourself from the area and go to a location with fresh air. Shut off sources of CO such as engines and generators and open doors and windows to ventilate the affected area if possible. If you or anyone aboard your vessel experiences persistent symptoms of CO poisoning seek medical attention right away.

⚠ WARNING

BE AWARE of the significance your exhaust may have on other vessels. Likewise, BE AWARE that the operation of other vessels' equipment may influence the carbon monoxide concentration on YOUR vessel.

⚠ WARNING

Exhaust fumes from engine(s) contain (CO). Boats with canvas deployed are more likely to collect exhaust fumes. Avoid brain damage or death from (CO). Keep cockpit and cabin areas well ventilated. Signs of exposure include headache, nausea, dizziness and drowsiness.

Propeller Safety

⚠ WARNING

Contact with propeller(s) can cause death or serious bodily injury. All engines should be off at all times when any swimmer is at or in the vicinity of the stern area or engine(s). When swimmers are disembarking or reboarding the boat, it is the operator's responsibility to ensure that the movement of the boat in the water or waves does not pose an unreasonable risk of personal injury.

Placing the engine(s) in neutral is not sufficient to protect swimmers in the water from the possibility of accidental propeller strike injury. There are many cases of reported injuries when engines were either thought to be in neutral but were not, or when engines were accidentally or inadvertently engaged.

Before engaging in any towed watersport activities with your Grady-White boat, make sure that you and all participants are knowledgeable of the proper and safe practice relating to such activities.

Suggested Boating Classes And Reading Material

Like a car, boats must be operated according to safety rules and traffic regulations. Although we include some basic boating tips in this manual, a thorough review of the safety rules and regulations for boating is beyond the scope of this text. A listing of boating safety courses approved by the National Association of State Boating Law Administrators (NASBLA) can be found at www.nasbla.org.

State law may require the certification or licensure of boat operators. To determine your state's boating license requirements, check with the responsible agency for the states *in which you operate*.

We support the work of the United States Coast Guard Auxiliary and the United States Power Squadrons. We urge you to attend any instructional classes sponsored by these organizations. Reference page 10 of *Sportfish, Cruisers, Yachts Owner's Manual* for training options, and page 28 for information on charts and maps. For further knowledge on boating, we advise that you review the following publications:

- **Piloting, Seamanship And Small Boat Handling**
  (Chapman)*
- **Boatman's Handbook**
  Tom Bottomly
- **Sorensen's Guide To Powerboats**
  Eric Sorensen

For more information on boating safety courses in your area call:

- Boating Education Hotline 1-800-336-BOAT (2628)
- US Coast Guard Boating Hotline 1-800-368-5647
- Contact Your Local Coast Guard

CHAPTER 3: GENERAL INFORMATION

Fueling

⚠ WARNING
Safety during fueling requires CAUTION and COMMON SENSE.

Please study the following precautions carefully. Consult your dealer if you have any questions. Prior to your initial fill-up, check your engine manual to confirm the type of fuel and octane rating specified by the manufacturer. Tanks should be filled when the boat is not in use to reduce the accumulation of moisture and condensation. Add stabilizer to fuel that won't be used in 60-90 days.

Fuel containing up to a 10% ethanol blend (E10) is acceptable for use in your boat. Do not use alcohol blended fuel that has greater than 10% ethanol such as E15 or E85. These concentrations may be harmful to fuel system components and outboard engines. Other considerations related to Ethanol fuel blends:

- Avoid mixing E10 with fuels that contain MTBE, an additive to gasoline in some fuel blends that oxygenates the fuel to reduce emissions.
- Use a 10 micron fuel filter to capture particulate contaminants that may be loosened from the fuel system due to the solvent nature of alcohol blended fuels.
- Carry spare fuel filters with a 10 micron rating on your boat for emergency replacement if required.

Before Fueling:

- Shut down all engines.
- Turn battery select switch(es) to "off" to insure that all fans, lights, etc. are off.
- Close all ports, hatches, windows and engine compartments to prevent fumes from accumulating in closed areas.
- Extinguish cigarettes and all other lighted materials.
- Have a fire extinguisher near.

During Fueling:

- Observe all safety regulations for the safe handling of fuel.
- Keep the fuel supply nozzle in contact with the fuel fill opening to prevent any static sparks.

After Fueling:

- Tighten the fuel cap until the audible clicking indicates it is secure. Check fuel hoses, connections, and tanks for leaks or deterioration. Wash and clean up any spilled fuel. Dispose of clean up rags or sponges on shore. Do not store these items in the boat.

- After fueling, ventilate all ports, windows, hatches and other closed areas. Conduct a "sniff test" to make certain all fumes are vacant before using the battery select switch(es).

See warnings and check list in Section 6, page 46 of the *Sportfish, Cruisers, Yachts Owner's Manual*. Reference *"Fuel Tank Compartment" on page 6-7* for more information on cleaning the fuel tank compartment.

Environmental Protection Agency

All Grady-White Boats meet the U.S. Environmental Agency standards in effect at the time of manufacture. All boats have an EPA label incorporated within their NMMA certification label. For international boats without an NMMA label, a separate label has been included to show compliance with EPA standards.

Pollution Regulations

The U.S. Coast Guard defines restrictions on the discharge of oil or hazardous substances and plastics or garbage in the "Federal Requirements for Boating and Boating Safety". You should have received this pamphlet when you registered your boat. Detailed below is a summary of those regulations. You should read the pamphlet and become familiar with any local restrictions where you operate your vessel. Passengers or crew members aboard your boat should also be notified of these regulations.

Discharge of Oil or Hazardous Substances

The Federal Water Pollution Control Act prohibits the discharge of oil or hazardous substances, which may be harmful, into or upon U.S. navigable waters. Vessels 26 feet (7.9m) in length or over must display a placard at least 5" x 8" (12.7 cm x 20.3 cm) with the text shown below. If your boat is 26 feet or greater in length, an adhesive backed label that meets these requirements is provided in your owner's packet. It is your responsibility to display this placard on the vessel in a conspicuous place in the machinery space or at the bilge pump control.

DISCHARGE OF OIL PROHIBITED

THE FEDERAL WATER POLLUTION CONTROL ACT PROHIBITS THE DISCHARGE OF OIL OR OILY WASTE INTO OR UPON THE NAVIGABLE WATERS OF THE UNITED STATES OR THE WATERS OF THE CONTIGUOUS ZONE IF SUCH DISCHARGE CAUSES A FILM OR SHEEN UPON OR A DISCOLORATION OF THE SURFACE OF THE WATER OR CAUSES A SLUDGE OR EMULSION BENEATH THE SURFACE OF THE WATER. VIOLATORS ARE SUBJECT TO A PENALTY OF $5,000.

NMMA

Disposal of Plastics or Garbage

The MARPOL ANNEX V is the Act to prevent pollution from ships and other vessels. Federal regulations prohibit the discharge of plastic garbage anywhere in the marine environment. Plastic includes, but is not limited to: synthetic fishing nets, ropes, lines, straws, six pack holders, styrofoam cups and lids, bottles, buckets and plastic bags. These regulations also restrict the disposal of other types of garbage within specified boundaries from shore. Any vessel 26 feet (7.9 m) and over must display the placard below or a similar version at least 4 ″ x 9 ″ (10.2 cm x 22.9 cm) which details the regulations. If your boat is 26 feet or greater in length, an adhesive backed label that meets these requirements is provided in your owner's packet. It is your responsibility to display this placard on the vessel in a prominent location readily accessible to crew and passengers.

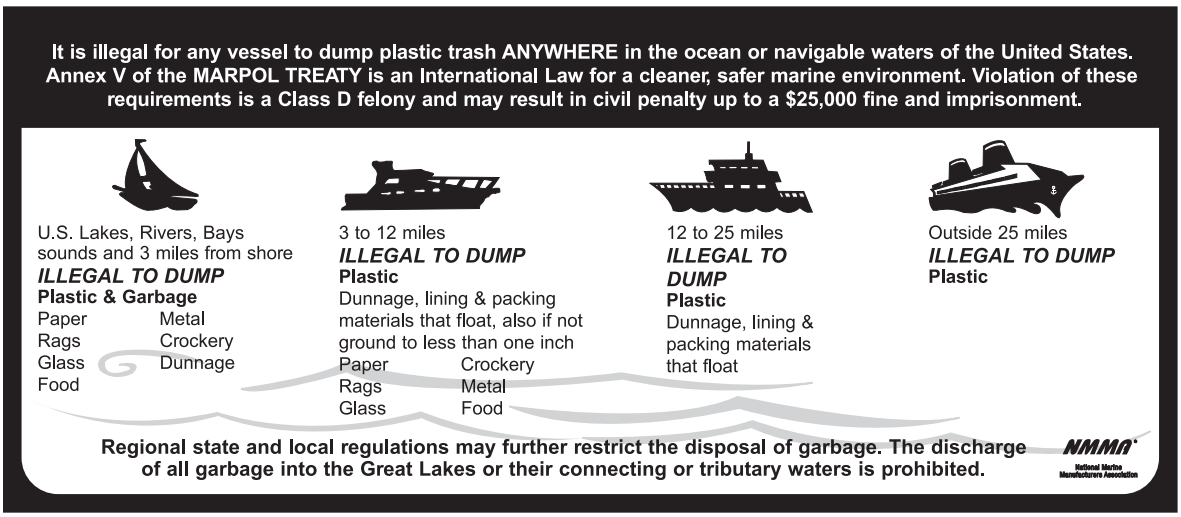

Predeparture

See the checklist on page 44 in *Sportfish, Cruisers, Yachts Owner's Manual* before starting out.

Casting Off and Approaching The Dock

Unlike an automobile, the stern of your boat reacts first when turning. A turn to the right will swing the stern to the left and vice-versa. Remember that turning your boat away from an object, such as a dock, will tend to swing the stern toward that object. Reference procedures for casting off and approaching the dock starting on page 51 of *Sportfish, Cruisers, Yachts Owner's Manual*.

Reboarding Ladders

Your Grady-White boat is equipped with two reboarding ladders. The cockpit side door ladder is intended to allow entry and exit of the boat for swimming or other activities in the water. The retractable transom mounted ladder provides a mean of unassisted reboarding in the event of someone falling overboard. This ladder is located on the port side of the transom at the stern of the boat and is accessible by a person in the water. To deploy, pull the pin with on the ladder and pull the

ladder out of the boat. There are three steps that fold down from the center column of the ladder. When the ladder is not in use it should be retracted and kept in the stowed position. The cockpit door ladder for the port side is removable and can be stored under the rigging lid in the cockpit. To use this ladder, slide the ladder into the receivers on the deck floor below the trim ring. Screw in the knobs provided through the receiver into the ladder. This ladder is not intended to be used for unassisted reboarding.

⚠ DANGER

To avoid risk of injury or death from contact with propellers, engines should not be running when near swimmers or when using reboarding ladder.

Anchoring

Some factors that determine the size and type of anchor most suitable for your boat include the size of your boat and the type of lake, sea or river bottom in your boating area. *Sportfish, Cruisers, Yachts Owner's Manual* has a list of tips concerning anchoring starting on page 56.

NOTICE

It is illegal to tie your boat to navigational aids such as buoys and markers.

⚠ WARNING

Never anchor off the stern of the boat especially in strong winds or currents. The weight of the stern and flat surface to the seas can easily cause water to enter over the transom and swamp the boat.

Towing

In the event of a mishap or power loss you may need to tow a boat or be towed. You should not tow a boat larger than your own. Always use safety and good judgment when towing. Never tow a boat if you are not equipped with the proper lines. Passengers should never grasp a towline. It should be secured to the boat. See page 39 in *Sportfish, Cruisers, Yachts Owner's Manual*.

Before towing a boat, make a bridle and tie it securely to the pad eyes on the transom with enough slack to clear the engines. Pad the line wherever it comes into contact with the boat to prevent chafing. Attach a tow line to the bridle so that it can slide from side to side to prevent too much pressure on a single pad eye. The tow line should then be attached to the bow eye or to a bridle on the towed boat. The tow line should be a minimum of twice the length of the towing boat, the longer the better. Do not try to run in too close when passing the towline to the other boat. Send either a light line or attach the towline to a life preserver to be pulled in. Be aware of the other boat's propeller.

The towed boat should always have someone at the wheel since the boat may swing off course. Start the tow off slowly; a steady pull at a moderate speed should be used. It is important to keep the slack out of the propeller area. Watch the action of the towing boat. If excessive slack develops in the towline and contact is obvious, turn in either direction to avoid hitting the stern.

⚠ WARNING

As a precaution, passengers on both boats should stay clear of the towline; lines under stress could snap and fly in either direction causing injury.

Shallow Water

Most boats that become grounded can be floated off with engine(s) tilted to reduce the draft at the transom. With engines tilted, try rocking the boat from side to side to break the suction of mud from the keel. Move passengers or heavy objects from the point where the boat is grounded. Do not lower or start the engine(s) until the boat is clear of the ground. Refer to page 63 in *Sportfish, Cruisers, and Yachts Owner's Manual*.

⚠ CAUTION

Do not lower or start engines if the propeller is in mud or sand. Wait until the boat is refloated to avoid damage to the cooling system of your engine.

Be mindful of water level fluctuations when boating in water with tidal changes. If you are grounded on an incoming tide, you can wait until the tide is high enough to refloat your boat. However, on an outgoing tide, quick action should be taken to refloat your boat. If this is not possible, set an anchor to keep the boat from becoming driven further aground. Set the anchor to counter the action of the wind or current.

Many inland areas have rocks and stumps which could crack or puncture a fiberglass hull. Be familiar with the boating area, and use caution in shallow water.

General Information On Boat Handling

The best method of learning how to handle and obtain the best performance from your boat is to practice and experiment. After several hours of operation, you should experiment with the throttle settings to discover the setting that will be the most comfortable and economical range for your particular load conditions.

Other conditions you may want to determine could include the following:

- Minimum speed for effective steering.
- Turning radius at different speeds.
- Response to steering at low speeds.
- Accelerating and deceleration rates.
- Time and distance to bring the boat to a stop at different speeds.
- Control of the boat in close quarters.
- Time required to bring the boat on plane.

Also read the section in *Sportfish, Cruisers, Yachts Owner's Manual* beginning on page 59 for information on safe operating speed.

Commonly Used Nautical Terms

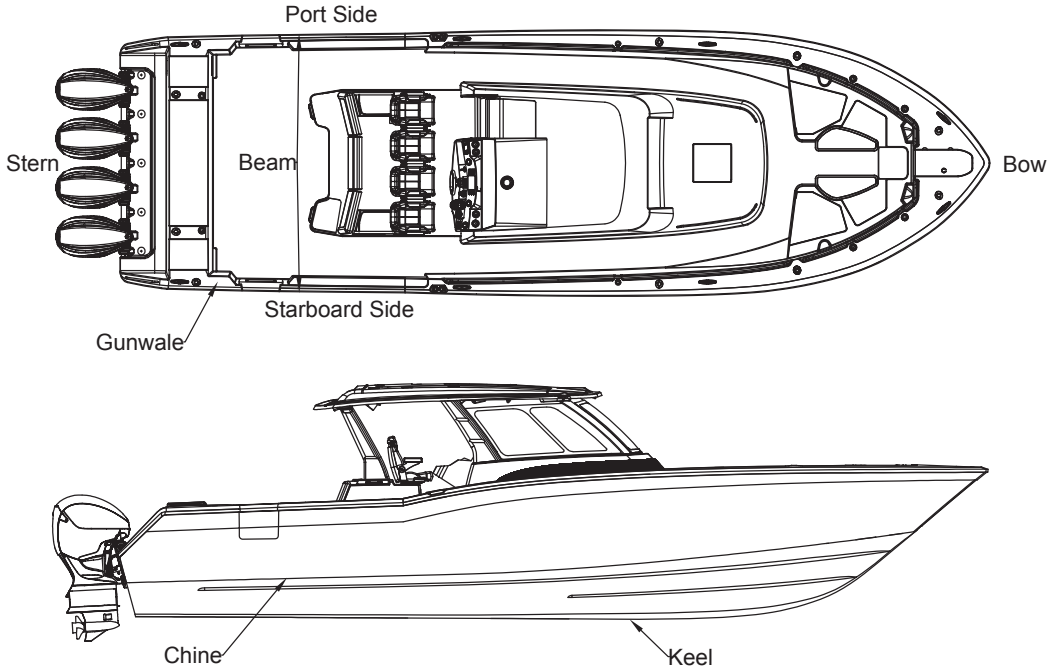

Abeam: a line perpendicular to a boat's keel

Access Plate: a removable, watertight cover that provides quick entry to enclosed areas for maintenance or visual inspection

Aft: toward the rear or stern of the boat

Beam: the greatest width of the boat

Bilge: the lower interior area of the hull

Bow: the forward section of the boat

Bow Eye: a U-shaped hull fitting used to attach the trailer winch to the boat

Bulkhead: vertical partition in the boat

Chine: point where the topside and bottom of the boat join

Cleat: deck fitting with arms or horns on which lines are fastened

Deck: upper structure which covers the hull

Draft: depth of water required to float a boat

Fathom: a depth measurement equal to six feet

Freeboard: distance measure between waterline and deck

Gunwale (Gunnel): point where the deck and hull join

Hatch: an opening in the deck to provide access below

Headroom: vertical distance between the floor and over head structure or canopy ceiling

Hull: major component that provides a watertight platform buoyant enough to float a craft and its load

Keel: the major longitudinal member of a hull—the lowest external portion of the boat

Knot: a measurement of speed equal to nautical miles per hour

Lee: the side that is sheltered from the wind

List: a tilt or lean to one side

Port: a term designating the left side of the boat when facing forward

Scupper: holes permitting water to drain overboard from deck and cockpit

Sheer: curve or sweep of the deck as viewed from the side

Starboard: a term designating the right side of the boat when facing forward

Stern: rear of the boat

Stringer: longitudinal members fastened inside the hull to add rigidity and strength

Wake: the movement of water created by a moving boat

Windward: side facing the direction of the wind (against the wind)

CHAPTER 4: PERFORMANCE

Performance Factors

Maximum performance is dependent on many factors and cannot be guaranteed. These factors will vary with changing conditions. Some of these factors are listed below. Reference the trouble-shooting guide on page 75 in *Sportfish, Cruisers, Yachts Owner's Manual* for additional suggestions on adjusting performance.

Engine Efficiency

Engines operate most efficiently when they are properly tuned, and the props are in good condition. Efficiency will decrease if normal care and maintenance are not performed. Neglecting the engines will cause power to drop and speed to decrease. In addition, expensive repairs may become necessary. Be sure to follow all instructions in the engine operation manual(s).

Weather Conditions

Weather conditions sway engine performance. Barometric pressure and humidity affect horsepower. A change of weather could amount to a 10% loss in horsepower on some hot days.

Load Distribution

A decrease in performance will be noted when gear, equipment, passengers, and fuel are added. This extra load will affect the performance of your boat according to the distribution of the weight. Another type of extra load that could affect performance is the accumulation of water in the bilge. Keep the bilge dry to eliminate this type of problem.

Marine Growth

Maximum performance is obtained only when your hull bottom is clean. Marine growth on the bottom of the boat will increase resistance and decrease speed. These conditions will also increase fuel consumption. Reference *"Cleaning" on page 6-1* for more information on cleaning your hull bottom.

Trim

Trimming refers to the use of the engine power trim or trim tabs in order to change the running or static attitude of the boat. The engines on this boat are equipped with power trim. Power trim is designed to enable you to change the angle of your engines relative to the boat. Power trim allows the boat to get on plane by lowering the bow. When on plane you can adjust the trim of your engines in order to avoid "plowing" or "porpoising". See pages 63 and 83 in *Sportfish, Cruisers, Yachts Owner's Manual* for more information. The trim tabs on your boat also control the trim of the boat, similar to the power trim. Refer to the Trim Tabs section in Chapter 8 for additional information.

Propeller

The condition of your prop has a major influence on the performance of your boat. Your engine(s) should be equipped with the best size prop for normal conditions. Unusual uses or weight conditions may require special props. A damaged prop can affect your boat's top speed, cause vibrations, create a sudden drop in RPMs or even increase fuel consumption.

⚠ CAUTION

Stay within the engine manufacturer's maximum and minimum RPM ranges when replacing props. This information is located in your engine manual.

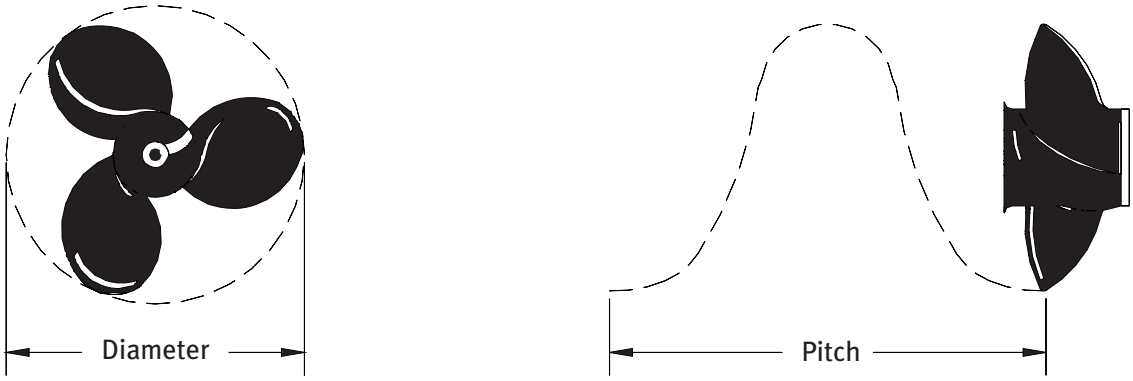

Diameter and pitch are the two basic dimensions of a propeller. Diameter is the distance across the circle made by the blade tips as the propeller rotates. Pitch is the theoretical (not accounting for slippage) forward distance the propeller would move in one revolution. An example of a propeller dimension would be 14 X 17 for a propeller having a diameter of 14" (35.6 cm) and a pitch of 17" (43.8 cm).

Outboard Engines

The engine manufacturer supplies all vital information concerning your engine(s) in the Operation and Maintenance Manual(s). Details of important engine functions such as the lubrication system, cooling system, and alarm/monitoring system are outlined in these manuals. Your familiarization with this engine reference material will result in the proper usage and service essential for safe and enduring engine performance. These manuals are included with the Owner's Packet.

⚠ DANGER

Do not inhale exhaust fumes! Exhaust contains carbon monoxide — a dangerous gas which is potentially lethal.

⚠ WARNING

Do not attempt to service any engine or drive component without being totally familiar with the safe and proper service procedures. Certain moving parts are exposed and can be dangerous.

⚠ CAUTION

Do not paint the outboard motors with anti-fouling paints designed for boat hulls. Many of these paints can cause severe damage to the engines.

Steering

Your boat is equipped with electric steering with the Helm Master EX steering system. The electric steering system does not have any hydraulic pumps or lines compared to conventional steering systems. An electric motor directly moves and secures the engines. Most outboard engines are equipped with an adjustable rudder trim tab. This trim tab should be adjusted to balance the steering at the speed which you travel most frequently. Variations in speed, boat load or engine trim will cause the steering to pull in one direction. If the boat pulls to the left, adjust the trim tab to the left and vice-versa.

- **Electric Steering:**
  The engine ignition panel must be ON for the steering to operate. There is no maintenance required for the steering system. For emergency operation of the steering cylinder, loosen the nut on the cylinder on the port side to manually rotate the engine. For any questions regarding the steering system consult your 6X9 Steering manual or your dealer.

Throttle/Shift Controls

The throttle/shift controls located at the helm station control the flow of fuel to the engine. They also act as gear shift levers to control the forward and reverse thrust of the propellers.

The middle position of the throttle control is the neutral position. Move the control forward to engage the shifting mechanism which creates a forward thrust of the propeller. Advance the forward movement to increase the fuel flow to the engine and boost the forward lunge.

Move the control lever aft of the neutral position to reverse the shift mechanism and create a reverse thrust of the propeller. Increase the aft movement to increase the reverse thrust. Remember that propellers are designed for maximum forward thrust; so, reverse thrust will not be as efficient.

All controls have a neutral safety mechanism. This mechanism will not allow the engine to start when the control is in gear.

Neutral Hold Button

The neutral hold button allows the increase of engine RPMs without engaging the forward or reverse gear. The active indicator will be illuminated during operation.

See Yamaha Helm Master™ EX Operation Manual for detailed instructions on using the electronic controls.

Reverse the shift mechanism to stop a boat that is moving forward. This change in direction will provide a “braking action” and slow the boat.

⚠ CAUTION

The braking action causes a wake which may wash over the transom and flood the boat if the vessel is moving too fast. Allow engine RPMs to decrease before shifting into reverse. Also, under certain conditions, not allowing the RPMs to reduce before shifting to reverse may cause the engine(s) to shut down.

CHAPTER 5: INSTRUMENTATION AND SWITCHES

Yamaha Instrumentation Panel

Grady-White installs Yamaha Command Link Plus instrumentation. The instrument panel is powered by the ignition panel and will operate when the ignition is on.

Yamaha CL7 Command Link Display (Full Maneuverability Package)

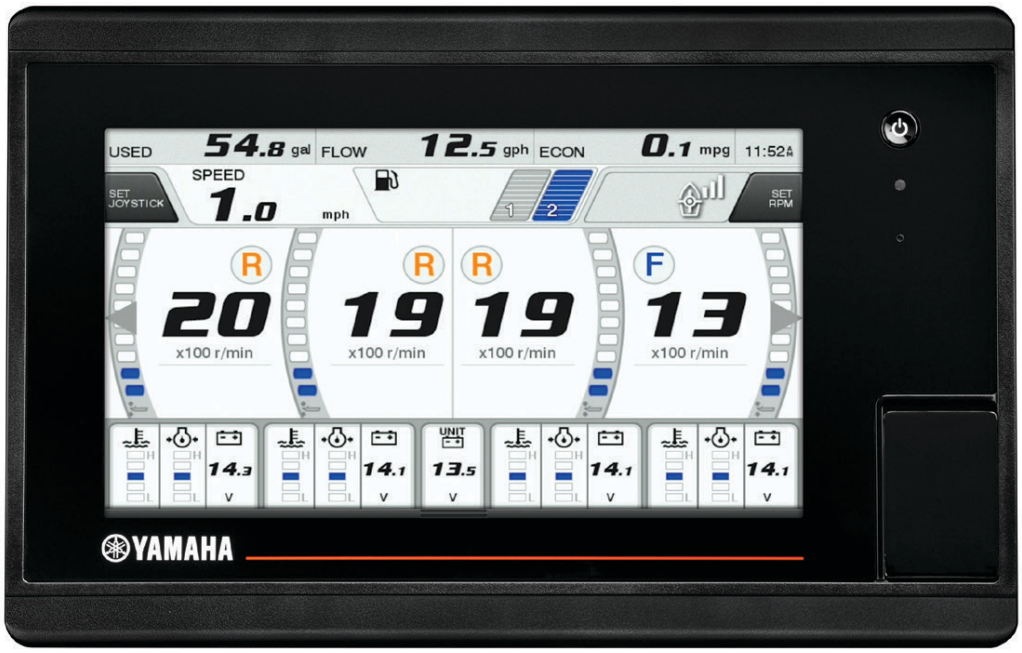

The Yamaha display provides engine and boat information listed below. The display of these functions and other graphics may be customized. Please see the Yamaha owner's manual for detailed instructions on customizing.

- **Fuel Level**

  This feature indicates the gas tanks' fuel level. Things to remember when reading this gauge:

  - The accuracy of your gauge varies with the attitude of your boat in the water (trim or list).
  - The fuel pickup tube inside the gas tank is not capable of withdrawing all of the fuel from the tank.
  - The #1 bar graph indicates the fuel level on the forward tank and the #2 bar graph indicates the fuel level on the aft tank.

For these reasons, never operate your boat at extremely low fuel levels.

- **Fuel Economy**

  This feature indicates the engine's fuel economy in miles per gallon.

- **Fuel Consumption**

  This feature indicates the fuel consumption in gallons since the feature was last reset.

- **Fuel Flow**

  This feature indicates the fuel flow through the engine(s) in gallons per hour.

- **Low Fuel Warning Indicator**

  This feature indicates when the fuel level in the fuel tank(s) is becoming low by flashing the lowest bar.

- **Speedometer**

  This feature indicates boat speed in miles per hour or knots.

- **Trip Distance Meter**

  This feature indicates the distance traveled in miles or nautical miles since the meter was last set.

- **Revolutions Per Minute (RPM)**

  This feature indicates the RPM using 100 RPM intervals. Consult your engine owner's manual for the recommended operating RPM range.

- **Trim Position**

  This feature indicates the angle of thrust of the engine. See *"Trim" on page 4-1* for adjustment recommendations.

- **Battery Voltage Indicator**

  This feature indicates the battery charge when the engine is off and indicates the alternator output when the engine is running. A reading of 12 or 13 volts is normal indicating a fully-charged battery. Readings of 11 or below indicate a weak battery which may not start the engine. A reading of 13 to 15 volts when the engine is running is normal. Readings over 15 volts may indicate regulator problems. Low or fluctuating readings may indicate loose connections or trouble in the regulator and alternator circuit.

- **Cooling Water Temperature with Warning**

  This feature indicates the temperature of the cooling water circulating through the engine and warns you when the temperature exceeds the recommended operating range indicated by your engine owner's manual. Should you receive this warning, immediately shut off your engine to prevent damage. Overheating is often caused by obstruction of your engine's intake on the lower unit. Check this water intake first if you experience trouble.

- **Hour Meter**

  This feature records the cumulative number of hours the engine has been in use.

- **Trip Hour Meter**

  This feature indicates the number of hours the engine has been in use since it was last set.

- **Oil Pressure with Warning**

  This feature indicates the engine oil pressure with a warning for low oil pressure. Refer to your engine owner's manual for information regarding engine oil and oil pressure.

Helm Master EX™

The Helm Master EX™ system is an expandable engine control platform developed by Yamaha. Every boat is not equipped with all of the following options. If you would like to add any additional features to your boat, discuss possible options with your dealer. For detailed operation instructions on the following Helm Master EX™ components consult your 6X9 Digital Electronic Control owner's manual.

DEC Controls

The Digital Electric Control has 4 control selector buttons, whose activation is indicated by a blue LED, and control switches. The Single Lever selector allows the port lever to control the shifting and speed of all engines in multi-engine applications. The Station Selector is used to select the active station on boats with an additional station added. The Center Engine selector allows the port lever to control the center engine(s) in triple and quad engine applications. The Neutral Hold selector allows the selected engine to be throttled up with the shift function disengaged. The Power Tilt and Trim switches on the digital control adjust the trim of all engines or a combination of engines in multi-engine applications. The Speed Selector switch can be used to control the RPM of the engines to provide incremental changes to speed.

The Electronic Key Switch uses a radio frequency key to power the main ignition panel. The system can be locked or unlocked using the Key Fob provided with the boat. To operate the lock/unlock feature, the fob must be within 15 ft (5m) of the helm and to operate the ignition panel, the fob must be within 32 in (0.8m) of the helm. After unlocking the system, press the Power button, then the Start/Stop button on the ignition panel to start the engines. To engage the Y-COP security system press the lock button on the Key Fob after the engines are turned off. A single audible beep indicates the system is immobilized.

The Command Link Plus® display allows the operator to adjust and customize settings, though some settings must be adjusted by an authorized technician. The information provided here is only intended to be an overview of the system. For complete details on the operation and set-up of the Helm Master system please refer to the Yamaha owner's manual or consult your dealer.

Digital Electric Steering (DES)

The DES package uses an electric actuator to steer each engine. The Digital Steering Helm and Digital Electric Control send signals to the engine and Steering Control Unit (SCU), which control the operation of the electric steering actuator(s) on the engine(s). The SCU receives signals from the steering actuator position sensors and the Boat Control Units (BCUs) to carry out steering and joystick (if equipped) operation.

Autopilot

The Autopilot system is an automatic piloting function that assists with steering and throttle operations to keep the boat moving to a desired point or heading. Adjustments to a heading or course are done through the use of the Autopilot panel or through an aftermarket Multi-Function Display (MFD).

a. Heading Hold: This allows the boat to continue moving in the same direction as when the mode was set.

b. Course Hold: This allows the boat to keep a course to a specific waypoint, compensating for wind and current.

c. Pattern Steer: This allows the boat to steer along a pattern pre-set on the MFD by the user.

d. Track Point: This allows the boat to move along a series of waypoints inputted by the user set of the MFD. Depending on settings, it can slow or stop the boat when it reaches its final destination.

Full Maneuverability

Helm Master EX™ Full Maneuverability Package is a fully integrated boat control system for Yamaha outboard-powered boats, in twin, triple, or quad engine configurations, which includes digital electronic steering, digital electronic throttle and shift, and a joystick control to facilitate docking. It also includes a virtual anchoring system, called “Set Point.”

The Helm Master EX™ Set Point has four primary modes: Stay Point™, Fish Point™, Drift Point™ and Drift Point Track™. Each Set Point mode provides a solution to maneuvering challenges boaters may encounter.

a. Stay Point: Stay Point keeps the boat positioned near a particular spot; it maintains a selected position and heading.

b. Fish Point: Fish Point enhances fishing options; it maintains a selected position, but not a heading, and primarily uses only idle RPM to do so.

c. Drift Point: Drift Point allows the boater to drift the boat with the wind or the current; it maintains a selected heading, but not a position.

d. Drift Point Track: This allows the boat to drift along a route set by the user.

On the joystick are five control selector buttons. The Joystick selector activates the joystick. The throttle and joystick must be in the neutral (center) position for this selector to be activated. The joystick controls the side to side and rotational movement of the vessel. The operator is the central pivot point around which the boat moves and the further one moves the joystick, the greater the thrust and speed in that direction. The power level can be adjusted to provide more or less thrust based on the operating conditions. This is done through pressing the (+) or (-) buttons on the joystick. The power level setting is displayed on the CL7 Display and displays levels 1 through 5. The joystick can also be used to adjust the speed, heading and position of the boat when operating in autopilot mode. Return the joystick to the neutral position when finished maneuvering. Operating the digital electric control disengages the joystick and returns operation to the control and steering wheel.

Switch Panel

At the helm station you will find an accessory switch panel. There are 12 manual switches on the 456 helm panel. The six port switches are load reversing toggle switches. They control the hardtop vents, sunroof, Sureshade, and wiper system. The six starboard switches are those that are connected to CZone but require quick access due to the type of features they control. They are controls for the horn, navigation lights, anchor light, aft and forward bilge, and a blank accessory switch. More detailed descriptions of switch functions are located in Chapter 8 of this manual.

456 HELM SWITCH PANEL

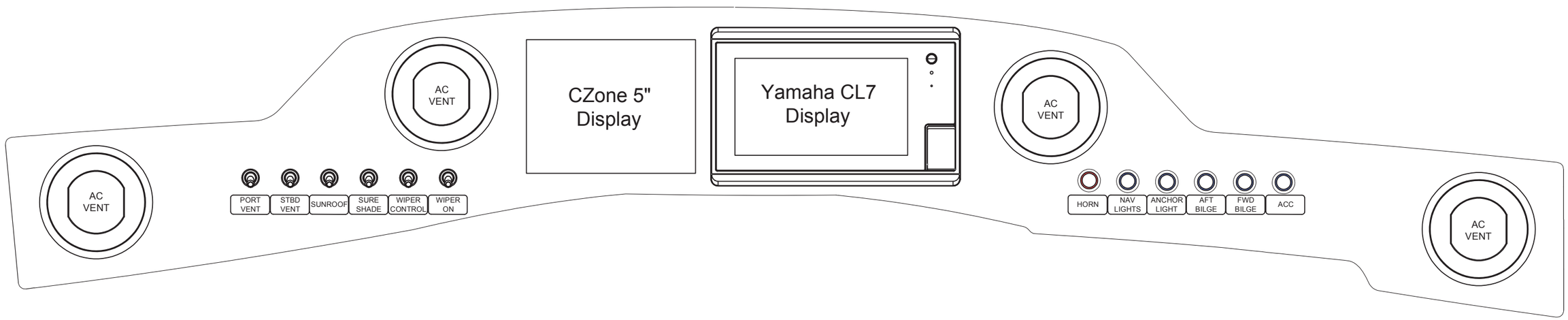

CHAPTER 6: MAINTENANCE AND SERVICE

General

The amount of maintenance required to keep your boat operating properly and to maintain the appearance is dependent on how the boat is used, amount of usage, salt or fresh water, geographic location, etc. While proper maintenance of your boat is a source of pride, it is also key to maintaining your boat's value.

Some basic maintenance items are covered in this chapter. Other manuals in your Owner's Packet contain important additional information regarding the use and maintenance of your boats other systems.

Keep the bilge area clean and dry. Leaks found early and corrected will less likely cause damage. Do not allow grease, grime, and dirt to build up.

Exterior Fiberglass Finish

The exterior finish of your Grady-White is a thin layer of resin with a finished color pigment called gel-coat. It is used for cosmetic purposes and makes routine maintenance relatively simple. Although gel-coat has a hard smooth surface, it does contain microscopic pores that will allow surface discoloration if not kept clean.

Maintenance

Normal exterior finish maintenance of your Grady-White is similar to the care you would give your automobile. Do not use caustic, highly alkaline cleaners or those containing ammonia. These cleaning agents may darken gel-coat. The resulting stain is a chemical reaction and can be removed with a rubbing compound or by light sanding with 400 grit followed by waxing. Also, using common household bleach (chlorine) may damage the gel-coat finish just like bleach can damage clothing with colors. Bleach impacts solid colors by causing blushing or fading and for this reason should not be used on gel-coat.

Cleaning

The best way to prevent discoloration and soil build-up is to hose the boat with fresh water after each outing or on a regular basis. This build-up is the result of use and environmental pollutants. Clean the boat regularly with a mild household detergent and plenty of fresh water. Avoid strong detergents, citrus based cleaners, or bleaches. These products are potentially harmful to the appearance and durability of your boat's gel-coat. Always read the label before using any cleaning product to make sure it says safe for use on fiberglass finishes. Use a sponge on smooth surfaces and the deck. A brush can be used on the nonskid areas. Use fresh water to rinse away all grime and residue.

Finish/Waxing

Gel-coat will age or dull naturally due to constant exposure to the natural environment and pollutants. Discolorations are shallow in depth. Factors that will affect the rate of discoloration are: the sun, pollution, old wax accumulation, and the salt content of water. Polishing compound (fine abrasive) or rubbing compound (coarse abrasive) is recommended for use on fiberglass finishes to remove scratches and stains or restore severely weathered surfaces. These products can be applied by hand or mechanical means. The process below will help restore fiberglass finishes:

- Clean the affected area with a good detergent and fresh water.
- Remove stubborn stains or discoloration by gently wet sanding the affected areas with 600 grit "wet or dry" sandpaper. **Always sand in one direction.** Use plenty of water and sand curves in the same direction. Dry the area to make sure all the discoloration has been removed. Repeat this process if necessary.
- Buff using a polishing compound suitable for fiberglass, an electrically or pneumatically operated buffer at low speed (1750-2250 RPM), and an 8-inch (20.3 cm) lamb's wool pad.

⚠ CAUTION

Keep buffer moving. Do not allow it to rest in one spot. Heat build up will quickly distort the surface.

⚠ CAUTION

Compounding too often or excessive compounding can wear away the gel-coat.

When buffing is complete, wash away compound with fresh water and dry the area.

- Once the area is clean it may be waxed. This will enhance the gloss while providing a seal to prevent staining or soil accumulation.
- See a local dealer for advice on wax for your boating region. The wax film will seal the pores as well as enhance the looks of your boat. **Do not wax surfaces that may be walked on; they will become slippery.** While waxing your boat, inspect the surface for any damage. Have the damage corrected as soon as possible.

Repairing

Though gel-coat is a very durable material, it is susceptible to scratches, blistering, and web-like cracking (crazing) over time. It is elastic enough to withstand strong blows while flexing with the hull's movement. Gel-coat problems are cosmetic and will not affect the structural integrity of your boat.

Some gel-coat damage and imperfections such as nicks and scratches can be repaired by obtaining a color match patch kit. This kit can be purchased through your Grady-White dealer. Instructions are included in the patch kit.

⚠ WARNING

M.E.K.P. (Methyl ethyl ketone peroxide), gel-coat and acetone are flammable and hazardous chemicals that must be handled properly. Follow instructions carefully. After the gel-coat is catalyzed, it will soon heat up and put off fumes. When finished with catalyzed chemicals, or if they start to build up heat, submerse completely in water until cool.

Bottom Paint

If your boat is left in the water for more than a few days at a time, the hull bottom below the waterline should be painted with anti-fouling paint to protect it from marine growth and barnacles that hinder performance. Since anti-fouling paint slowly dissolves, yearly inspection and cleaning of the hull bottom to prevent marine growth is advised. Repaint when necessary. To help prevent blistering, use an epoxy barrier coat to be applied in conjunction with the anti-fouling paint.

Canvas

Grady-White's canvas is made using the highest quality vinyl and latest sewing techniques. The canvas will not be completely leak proof. The seam holes in your canvas may stretch and tend to leak. However, you can correct this problem by applying Apseal® or Uniseal™ to the seams.

Please understand that Grady-White does not warrant the fit and design of the canvas to be entirely watertight.

Maintenance of Canvas

To maintain your boat's top and other canvas follow these guidelines:

- Clean the fabric regularly to prevent the buildup of soil and soil penetration of the fabric. Simply brush off any loose dirt, hose down canvas and clean with a mild solution and warm water.
- Do not use petroleum-based or ammonia cleaners on canvas or clear vinyl as they will yellow.
- For heavily soiled fabric, remove from the frame. Soak the fabric in a solution of ½ cup (.12 L) of Clorox® and ¼ cup (.06 L)of Ivory® or Lux® soap per 1 gallon (3.8 L) of warm water.
- Let soak until mildew and stains can be brushed out with a common kitchen brush.
- Rinse thoroughly with cold water until all soap is removed.
- Allow fabric to air dry completely.

NOTE: Do not steam press or dry in an electric or gas dryer. This will damage the canvas fabric. Water repellent was applied to your canvas during manufacturing. The repellent may have diminished after extended cleaning. Re-treatment of the fabric is recommended after extended cleaning. Do not use wax-based treatment products. Use a water based repellent like Apseal® or Uniseal®. Scotchguard® is effective for short-term use only.

Snaps and Zippers

To protect the snaps and zippers on your boat's canvas and cushions from corrosion and binding, Grady-White includes a tube of lubricant (E-Z Snap®) in your Owner's Packet. The lubricant, manufactured by IOSSO (part number 10909), should be applied per the manufacturer's directions during the initial use of your canvas and cushions. The lubricant should be reapplied every 3 months or sooner depending on your boating environment and usage. Contact your dealer if you need to reorder lubricant. A snap assist tool should be used whenever you remove the canvas or cushions to prevent damaging or tearing the material.

Vinyl

- Clean clear vinyl thoroughly with denatured alcohol and apply a protective layer of clear wax. **Do not** use paste wax, as it will turn the vinyl yellow. This process should be repeated as necessary to maintain the protective wax coating.
- Dry all canvas before storing to prevent mildew.
- **Roll** vinyl panels to prevent them from cracking. This is necessary to prevent them from cracking. **Never fold these pieces!**

Upholstery

Your exterior vinyl upholstery may be cleaned with a mild solution of household detergent and fresh water. Commercial cleaners for vinyl also work well. Since the seams of your exterior upholstery are not waterproof, your upholstery should be stored in the cabin or covered when not in use. Exterior cushions will trap moisture between themselves and the gel coat. If a cushion is not removed to allow the moisture to dry, blistering of the gel coat may occur. Cockpit bolsters may be removed if you desire. These bolsters clip onto brackets mounted to the deck structure. Screws are then installed through the underside of the bolster to hold them in place.

Polyethylene/Acrylic/Vinyl

In the cockpit area of your boat, acrylic and vinyl are used for trim and polyethylene is used for the toe rails and rod racks. Routine maintenance for vinyl should include regular cleaning with soapy water and the application of a surface protector at least twice per year. Polyethylene can be cleaned with products such as 409® or any spray and wipe cleaner. Acrylic can be maintained with mild soap and water and a soft cloth.

Scuppers

Grady-White boats have self-bailing cockpits meaning water on the cockpit floor drains by gravity through large aft scuppers and **not** into the bilge. The aft drains (scuppers) have an external scupper flap assembly that restricts the flow of water back into the boat. Inspect the flaps periodically to make sure they are free of debris.

In addition to inspecting the scuppers, annually inspect the hoses and replace if necessary. To inspect hose, observe water flow between the cockpit and the thru-hull. If water flow seems restricted, a high pressure water hose can be used to flush debris from the scupper hose. If water leaks into the hull interior from the hose or fittings, replace these components immediately before using the boat.

Seachest

The 456 is equipped with a 7-gallon Seachest. The Seachest must be visually inspected on a regular basis. There is a clear acrylic lid that provides easy access to view the internal components of the Seachest. If there is build-up of debris in the bottom of the Seachest, first make sure the seacock is closed, then remove the wing nuts and remove the access lid. Wash out the debris and replace the lid if the rubber gasket is in good condition (no cracks and still flexible). If the gasket is in poor condition, replace immediately and secure the lid back to the Seachest. The bolts need to be torqued to 30lb-ft in order to avoid cracking the lid. The Seachest is sized to provide adequate water flow to all raw water appliances. If decreased flow is observed in the Seachest, inspect the hose attached to seacock and Seachest for marine growth or debris.

Caulking/Gasket

Deck fittings, bow rails, windows, hatches, etc. have been caulked or gasketed with the highest quality material to ensure a waterproof joint with the boat. However, the working action of normal use will tend to flex the joint and eventually break down the seal between them. Periodically inspect the caulking or gaskets for leaks. Recaulk or replace the gaskets as necessary, or have your dealer do the repair.

Hardware/Stainless Steel Rails

The hardware on your Grady-White is made of laboratory grade 316 stainless steel and needs regular cleaning to maintain its “less staining” properties. The key to maintaining your stainless steel is to keep it clean with a mild solution of soap and **fresh** water. Remove salt or dirt from your stainless steel on a regular basis.

Hardware Mounting

When fastening new hardware to the boat, be sure to seal the opening properly with silicone or 5200 to prevent leakage into the laminate or into the boat.

Aluminum Components

Hardtop Frames and Rod Holders

Due to the nature of aluminum and the harsh exposure conditions of the marine environment, it is important to follow a **required maintenance procedure**. Failure to follow a preventative maintenance procedure will most likely result in aluminum pitting.

Both painted and anodized aluminum parts must be washed periodically with a very mild soap and water solution. Grady-White recommends washing with a mild soap (such as Ivory® Liquid) after each use and every two to three weeks if stored in an outside marine environment. Strong cleaners and soaps must not be used. Never use abrasive cleaners or products that contain chlorine bleach. These products can remove paint and anodized coating.

Give special attention to the upper structure of a hardtop or T-top frame. The area just below the top is shielded by the canvas or fiberglass top and does not receive the natural rinse that rainwater provides. Failure to thoroughly clean and maintain this area will allow contaminates that attack the aluminum to remain on the frame.

For maximum protection on anodized aluminum, coat parts with a non-abrasive metal protector. The best protectors will displace moisture, remove contaminates, and leave a wax film protecting the anodized aluminum. Follow the application guidelines for the product you choose.

Metal Protectors:

Boeshield T-9	**Aluma Guard**	**Premier Polish**
PMS Products Inc.	Rupp Marine, Inc.	Aquatech by Nautical Choice
76 Veterans Dr.	4761 Anchor Ave.	6726 Netherlands Drive, Suite 200
Holland, MI 49423	Port Salerno, FL 34992	Wilmington, NC 28405
800-962-1732	866-477-2678	800-853-7760
www.boeshield.com	www.ruppmarine.com	www.aquatech-marine.com

CAUTION

Do not use abrasive cleaning products, pads, steel wool or steel brushes. These products will damage the finish.

Fuel System

To determine whether a fuel flow problem is in your fuel system or your engine, follow this simple method. Connect a portable tank to the engine and operate the engine. If the problem persists, the likely cause is with the engine itself. If the problem goes away, the source must be in the boats' fuel system. One component that should be inspected if a restriction occurs is the anti-siphon valve. If fuel does not flow properly through this part, it must be cleaned and/or replaced.

⚠ WARNING

Do not remove the anti-siphon valve and replace with a regular barb. Modification or removal of the anti-siphon valve could allow a dangerous accumulation of fuel and vapors in the hull in the event of a fuel system leak.

Annually conduct a detailed inspection of fuel system components, especially those hidden from routine inspection. Replace any fittings, deteriorated hoses, clamps or connections immediately. Fuel filter/water separators should be replaced at least annually.

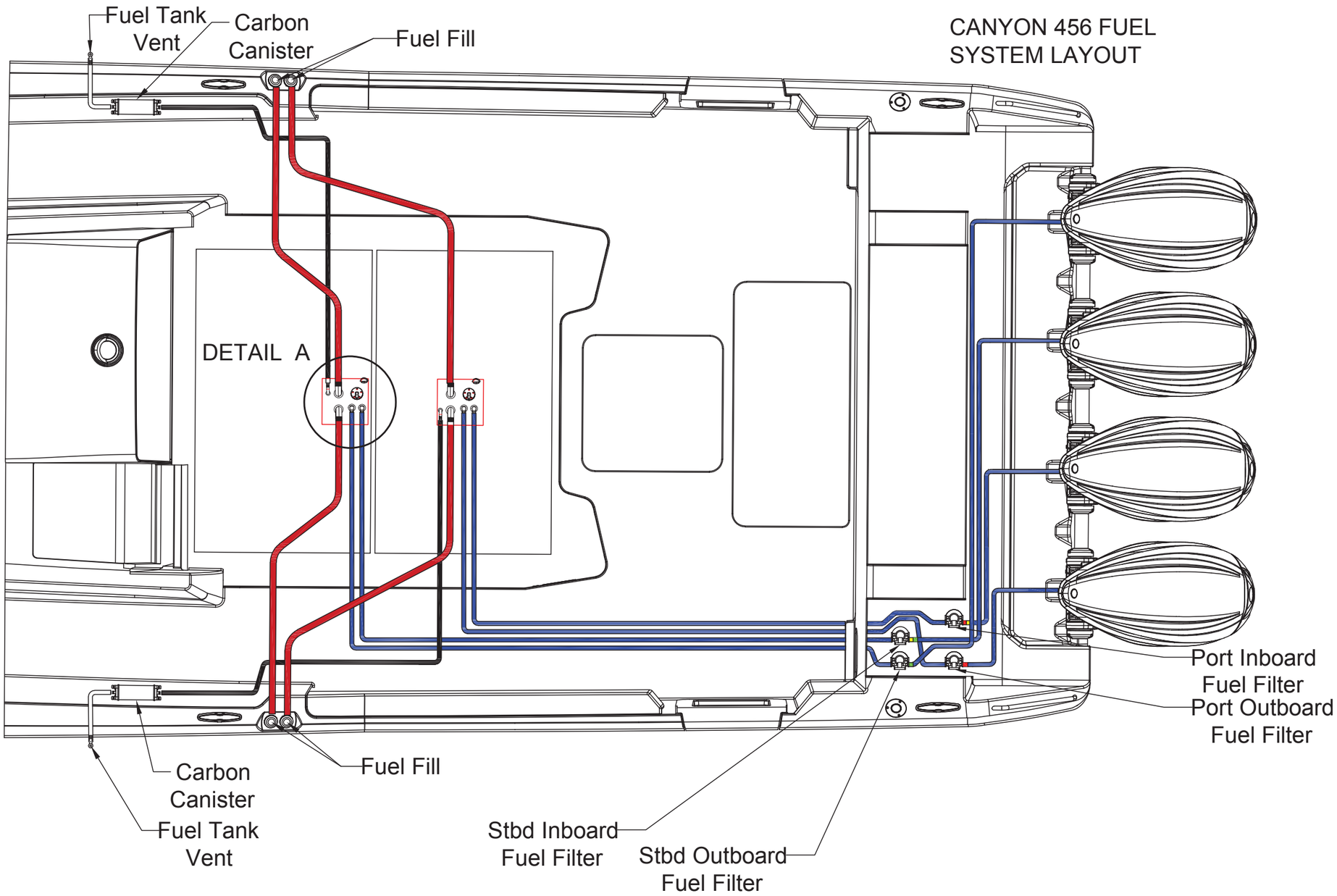
CANYON 456 FUEL
SYSTEM LAYOUT
Fuel Tank
Vent
Carbon
Canister
Fuel Fill
DETAIL A
Port Inboard
Fuel Filter
Port Outboard
Fuel Filter
Carbon
Canister
Fuel Fill
Fuel Tank
Vent
Stbd Inboard
Fuel Filter
Stbd Outboard
Fuel Filter

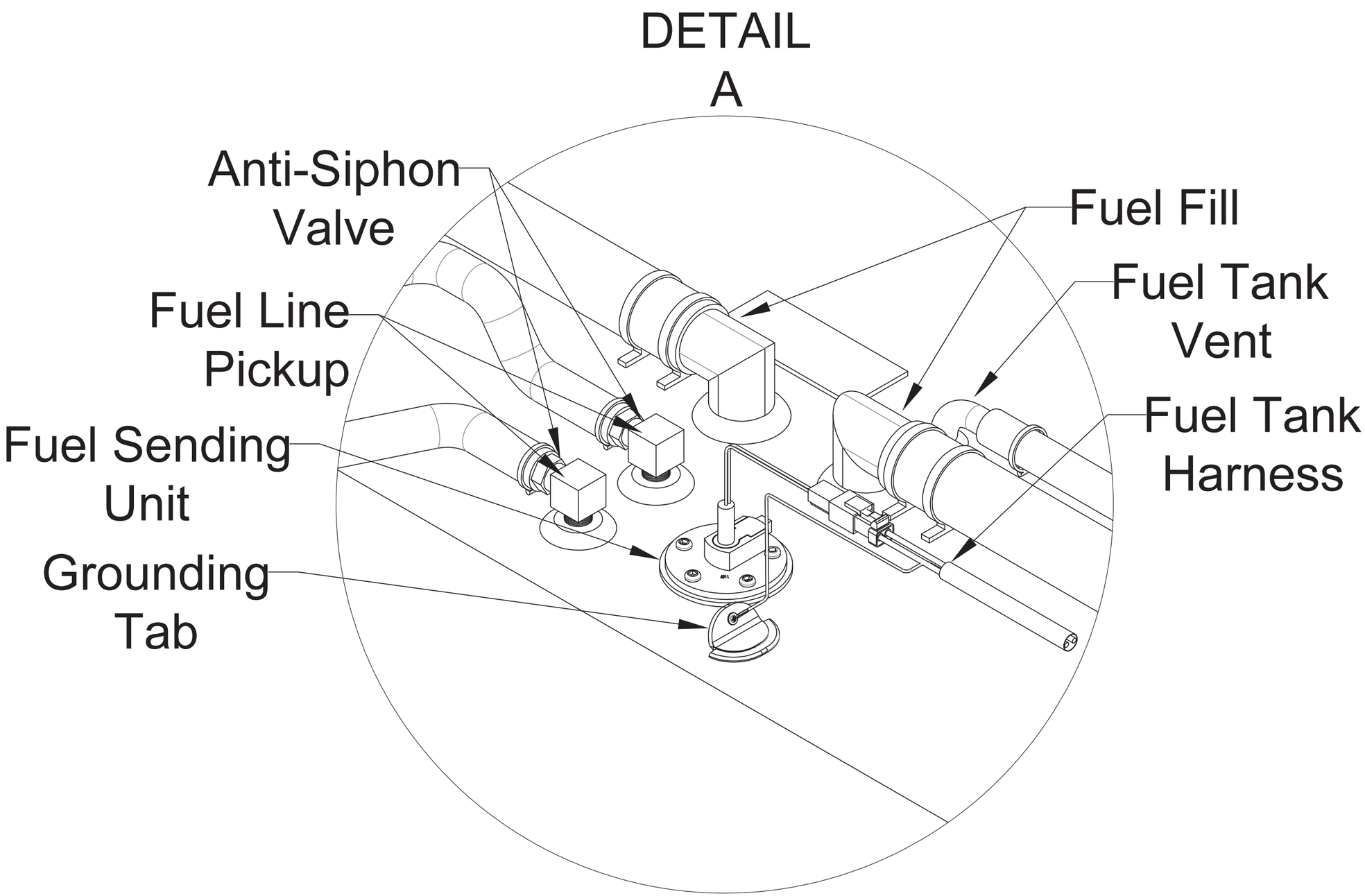
DETAIL
A
Anti-Siphon
Valve
Fuel Line
Pickup
Fuel Sending
Unit
Grounding
Tab
Fuel Fill
Fuel Tank
Vent
Fuel Tank
Harness

Fuel Tank Compartment

The fuel tank compartment needs to be rinsed periodically especially when used in a salt-water environment. Dirt accumulation attracts salt, creating salt crystals. Salt crystals can corrode most metal surfaces if left untreated over a period of time. To help protect your fuel tank from corrosion, rinse the compartment with **fresh** water. After rinsing, make sure all water is drained from the compartment. Open the rectangular access doors on the floor inside the helm seating station and inspect this area for leaks or unsecured lines. These access doors keep the fuel compartment sealed. Over time, the opening and closing of these plates causes the o-rings to wear out. Replace these o-rings as necessary to maintain the watertight integrity of the plates.

Shower Sump

The shower in the head compartment and condensation from the cabin air conditioner drain into a contained "sump" which is used to prevent hair, soap, scum and bacteria from accumulating in the bilge and creating odors. This sump should be cleaned regularly, and is located under the teak grate and removable subfloor in the shower. The sump pump box contains a filter. Remove the filter and rinse with water to clean. The filter should always be installed when using the shower to prevent the sump pump from becoming clogged.

Batteries

Proper battery power is essential to the operation of your vessel. For this reason, Grady-White has carefully chosen batteries with cranking ability and reserve capacity sufficient to meet your needs. Grady-White uses Deka Intimidator 8A27M brand marine batteries. If your boat is equipped with batteries not installed at the factory, consult with the battery manufacturer for proper care and maintenance instructions and the engine manufacturer for appropriate battery specifications. Replacements batteries should always be of the same brand, model, age and size. Never mix different types of batteries.

The Intimidator 8A27M is an absorbed glass mat (AGM) battery that is completely spill proof and maintenance free. AGM batteries recharge faster than conventional batteries and have a higher tolerance to deep discharge for more severe applications. AGM batteries are subject to permanent damage if used with a charging system not compatible with this technology, which should be considered if using a charging system other than those installed on your boat.

Batteries contain electrolytes and acids that can be harmful and volatile. They can also present an electrical hazard. When handling or servicing batteries, exercise caution and follow these guidelines.

- Avoid contact with skin, eyes, and clothing. Protective gloves and eye wear should be worn when servicing to minimize risk.
- Batteries can produce explosive gases. Ventilate when charging. Keep sparks, flames and cigarettes away at all times.
- An insulated boot should cover battery terminals in normal use. Never allow anything metal to bridge between the positive and negative terminals which could arc or create a burn hazard.

- Keep battery terminals clean by scrubbing them with a stiff brush and a mixture of baking soda and water. Afterwards, apply a light coat of grease or corrosion preventative.
- Batteries should be secured in the trays installed to minimize movement when the boat is in use.

This is not a complete set of guidelines. It is your responsibility to safely maintain your batteries and avoid injury. Use good judgment and remain alert when working with batteries. In the event of an accident, immediately seek medical attention.

WARNING

Do not allow any electrically conductive material to make contact with both the positive and negative terminals at the same time (i.e. a hand tool used when disconnecting and reconnecting battery cables). A short of this nature can cause severe burns and create dangerous sparks which could result in personal injury and/or property damage.

CAUTION

When disconnecting and reconnecting battery cables, the black cable must be connected to the negative terminal and the red cable must be connected to the positive terminal. Reversing these connections will immediately damage your system.

Never disconnect the battery when the engine is running. This can cause damage to the charging system. When replacing your battery, use the same brand and type as the factory installed battery. If this is not available, reference your engine Owner's Manual for recommended battery type and required performance specifications.

LED Lighting

LED (light emitting diode) fixtures do not have bulbs and are not serviceable. LEDs have extremely long life and should not need replacement during the life of the boat. In the event of damage or malfunction, the entire light assembly should be replaced. See your Grady-White dealer for replacement LEDs.

456 DC Accessory Wiring Color - Fuse/Breaker

Accessory	Wire	Amperage	Location
Lights			
Aft Rigging Light	16 ga DkBlu/Brn	5	Controlled thru CZone Fuses located inside CZone modules in the Companionway Wall, H-Top & Aft Rigging Area
Anchor Light (Mast)	16 ga Gry/Wht	5	
Cabin/Berth Lights	16 ga Blu/Grn	10	
Cockpit Lights - Aft	16 ga Blu/Yel	10	
Cockpit Lights - Fwd	16 ga Blu/Yel	10	
Galley Lights	16 ga Blu/Grn	10	
Head/Vanity Lights	16 ga Blu/Grn	10	
Hardtop Down Lights (Wht) Hardtop Down Lights (Blu)	16 ga LtBlu/Pnk 16 ga LtBlu/Blu	5	
P/S Livewell Lights	16 ga Blu/Red	w/Livewell Pumps	
Panel Lights	16 ga Dk Blue	w/Nav Lights	
Nav Lights (Mast/Side)	14 ga Gry/Red	5	
Spreader Lights - Aft	14 ga Blu/Wht	10	
Spreader Light - Fwd	16 ga Blu/Wht	5	
Remote Fob Sw 3 - Cabin Lts	16 ga LtBlu/Grn	N/A	
Remote Fob Sw 4 - Cpit Lts	16 ga LtBlu/Org	N/A	
Underwater Lights (Center)*	14 ga Blu/Pnk	5	
Underwater Lights (Outboard)*	14 ga Blu/Pnk	10	**Split between 2 ports in COI #2; operates on one combined function switch in CZone*
Pumps			
Auto Float Switch (Aft)	16 ga Brn/Wht	10	Controlled thru CZone Fuses located inside CZone modules in the Companionway Wall & Aft Rigging Area
Auto Float Switch (Fwd)	16 ga Brn/Red	10	
Bilge Pump Rule 2000 (Aft)	16 ga Brn	10	
Bilge Pump Rule 2000 (Fwd)	16 ga Brn/Blk	10	
Discharge	14 ga Org/Gry	10	
Fresh Water Pump	12 ga Org/Blu	15	
Livewell Pumps - Sentry 1500 GPH (Port & Stbd inside Sea Chest)	16 ga Org/Brn	10 x 2	
Raw Water Pump	12 ga Org/Brn	15	
Shower Sump Pump (Float Switch)	16 ga Brn/Org	5	
VacuFlush	14 ga Org/Red	10	
Anchor Windlass (24V)			
Main Positive	1/0 Red	110	Port Aft Lean Bar storage (MRCB)
Positive to Switches	14 ga Red	5	24V Bank Fuse Block
Down	14 ga Grn/Org	N/A	N/A
Up	14 ga Blu/Org		

456 DC Accessory Wiring Color - Fuse/Breaker– *Continued*

Accessory	Wire	Amperage	Location
Bow Thruster (24V)			
Positive	4/0 Red	325	24v Batt Bank in Lean Bar (ANL)
Battery Monitor 24V (to COI #1)	16 ga Wht/Red	1	24V Bank Fuse Block
Windshield Wiper System			
Wiper	10 ga Org/Blk	15	Fuse Blocks in Companionway Wall
Fast	10 ga Gry/Blu	N/A	
Slow	10 ga Gry/Grn	N/A	
Washer Solenoid Valve	14 ga Org/Pnk	N/A	
Miscellaneous			
12V Accy Outlet (1 - Helm)	10 ga Red/Org	15	Fuse Blocks in Companionway Wall
USB Outlets (2-Cabin/1-Helm)	14 ga Red/Org	5 x 3	Fuse Blocks in Companionway Wall
USB Outlets (2 - Bow)	12 ga Red/Org	10	Fuse Blocks in Companionway Wall
12-24V Ground	10 ga Blk	N/A	24V Bank neg to Ground Bus in Companionway Wall
AC-DC Ground	8 ga Grn	N/A	ACOI to Ground Bus in Companionway Wall
Amplifier (Cabin)	14 ga Red	15	Fuse Blocks in Companionway Wall
Amplifiers (Lean Bar)	4 ga Red	80 x 2	Aft Rigging (MRCBs)
Amplifier Remote	16 ga Wht/Vio	N/A	N/A
Accy Negatives (Branch)	Blk [1 2]	N/A	N/A
Accy Negative (Main)	2/0 Blk	N/A	N/A
Aft Ground Block	4/0 Blk	N/A	Jumper to Fwd Gnd Block (by batteries)
Battery Monitor 12V (to COI #2)	16 ga Wht/Red	1 x 5	4 Eng Start, 1 House Bank Fuse Block
Bilge Blower	14 ga Brn/Yel	10	COI #2
Constant 12V	14 ga Red/Pnk	10	Batt Sel Panel (MRCB)
Cord Reel	14 ga Org/Red	20	COI #2
DC Accy Positive	2/0 Red	100	Batt Sel Panel (MRCB)
DC Main Positive	4/0 Red	325	Aft Rigging (ANL fuse)
Engine Flush	16 ga Red/Brn	10.0	House Bank Fuse Block
Engine Isolator Leads (XTO425)	2 ga Red	200 x 4	Aft Rigging (feed House Bank)
Fuse Block Positive	4 ga Red	N/A	N/A
Fuel Grounds	16 ga Grn	N/A	N/A
Fuel Tank Sender (Aft)	16 ga Pnk/Wht	N/A	N/A
Fuel Tank Sender (Fwd)	16 ga Pnk	N/A	N/A
Generator Cranking Lead	4 ga Red	100	Aft Rigging (ANL fuse)
Hardtop Negative (Main)	10 ga Blk/Blu	N/A	N/A

456 DC Accessory Wiring Color - Fuse/Breaker–*Continued*

Accessory	Wire	Amperage	Location
Miscellaneous			
Hardtop Side Vents	14 ga Wht/Blu	15 x 2	Fuse Blocks in Companionway Wall
Head Vent	16 ga Brn/Grn	5	Fuse Blocks in Companionway Wall
Helm Seats	12 ga Wht/Org	10 x 4	Fuse Blocks in Companionway Wall
Out	14 ga Wht/Blk	N/A	N/A
In	14 ga Wht/Grn	N/A	N/A
High Bilge Alarm Sender Wires	16 ga Red/Wht (Sender) 16 ga Brn/Pnk (Return)	N/A	At Inst/Sw Panel and Float switch
Horn	14 ga Org/Wht	15	H-Top OI
Hosereel, Raw Water	14 ga Blu/Gry	20	Fuse Blocks in Companionway Wall
Nav Mast	16 ga Wht/Blk 16 ga Wht/Grn	5	H-Top MOI
Seacock Control (Waste)	16 ga Gry/Blk	3	Fuse Blocks in Companionway Wall
Seacock Valve (Waste)	16 ga Gry/Pnk	3	Fuse Blocks in Companionway Wall
Seacock Position Ind (Waste)	16 ga Vio/Brn	N/A	Open
	16 ga Vio/Grn	N/A	Close
Seacock Control (Raw)	16 ga Gry/Blk	3	Batt Sel Panel (MRCB)
Seacock Valve (Raw)	16 ga Gry/Pnk	3	Batt Sel Panel (MRCB)
Seacock Position Ind (Raw)	16 ga Vio/Wht	N/A	Open
	16 ga Vio/Blk	N/A	Close
Seakeeper	12 ga LtBlu	15	COI #2
Seakeeper Case Ground	10 ga Blk	N/A	To Aft Hull Harness Ground Block
Step, Lean Bar	14 ga Wht/Org	15	Fuse Blocks in Companionway Wall
Stereos	16 ga Red	10 x 2	Fuse Blocks in Companionway Wall
Sunroof	14 ga LtBlu/Vio	20	Fuse Block in HT
Close	16 ga LtBlu/Yel	N/A	N/A
Open	14 ga LtBlu/Brn	N/A	N/A
SureShade Power	14 ga LtBlu/Red	15	Fuse Block in HT
Close	16 ga LtBlu/Blk	N/A	N/A
Open	16 ga LtBlu/Wht	N/A	N/A
Switch, Battery, House	16 ga Red/Blk	5	House Bank Fuse Block
Switches, Battery, Engines	16 ga Red/Gry	5	House Bank Fuse Block
Table, Port Bow	10 ga Wht/Blu	15	Fuse Blocks in Companionway Wall
Table, Stbd Bow	10 ga Wht/Blu	15	Fuse Blocks in Companionway Wall
Table, Cabin	10 ga Wht/Blu	15	Fuse Blocks in Companionway Wall
Television	10 ga Red/Grn	10	Fuse Blocks in Companionway Wall
Yamaha CL7	18 ga Red	5	Fuse Blocks in Companionway Wall

456 DC Accessory Wiring Color - Fuse/Breaker–*Continued*

Accessory	Wire	Amperage	Location
Zipwake Trim Tabs	14 ga Red	15	C-Stbd Eng battery (WP fuse)
	16 ga Red	3	Yamaha Ignition Panel (in-line)
CZone			
HT OI #1	10 ga Red	15	Fuse Block in HT
HT MOI	10 ga Red	15	Fuse Block in HT
Display, 10" Cabin	16 ga Red	3	Fuse Blocks in Companionway Wall
Display, 5" Helm	16 ga Red	3	Fuse Blocks in Companionway Wall
NMEA Buss	18 ga Red	5	Fuse Blocks in Companionway Wall
C'way OI #2	10 ga Red	15	Fuse Blocks in Companionway Wall
C'way COI #1	10 ga Red	25	Fuse Blocks in Companionway Wall
ACMI	16 ga Red	3	Batt Sel Panel (MRCB)
Aft Rig COI #2	10 ga Red	30	Batt Sel Panel (MRCB)

[1] Wire gauge is typically the same as the gauge of the power wire to the corresponding component, except as noted.
[2] Zipwake Distribution Unit ground lead is 14ga Blue

CHAPTER 7: WINTERIZATION AND STORAGE

General

Boats stored during the winter or for an extended period of time require some routine maintenance. The boat and its systems should be checked for maintenance and repairs prior to and during the storage process. Arrange repairs during the storage period to reduce downtime during your boating season.

Avoid costly damage and delay when launching your boat by having it stored and winterized properly. This information is presented as a general guide; the actual storage should be performed by a professional and qualified dealership. See page 71, in *Sportfish, Cruisers, Yachts Owner's Manual* for a checklist on winterizing and storage.

Boat Storage

Grady-White boats are equipped with stern eyes and a bow eye. These eyes are for anchoring and trailering purposes, and should be inspected regularly to insure structural integrity. Eyes that are severally corroded or bent should be replaced.

⚠ CAUTION

Boats should not be lifted for storage using the bow and stern eyes. Use slings or bunks for lifting.

Slings must be used for lifting your Grady-White to prevent damage to the boat. To avoid personal injury and property damage, it is advised to take extra precautions when lifting or moving the boat for storage.

While transporting a boat by a travel lift or fork lift, the structure should remain as close to ground level as possible. If slings are necessary for lifting or transporting, they should be in proper condition and tied together to prevent any movement (separating or slipping) which could cause damage to the boat. If fork lifts are used to move the boat, the forks should be padded, contoured to match the hull bottom, and in a secure location under the hull in alignment with the stringers. The forks should be long enough to prevent the boat from rocking forward and aft causing it to become unbalanced. Always verify the fork lift's capacity to ensure it is sufficient for the weight of the boat. Other conditions that should be considered before hauling, transporting, or storing your boat include overhead lines, ground conditions (frozen or soft), and storm conditions that may arise.

Make sure the keel, chines and transom are fully supported. Indoor storage is beneficial particularly if your climate produces freezing weather. The storage unit should not be airtight, but should be ventilated. Ventilation is extremely important both around and through the boat.

For outdoor storage, the boat may be shrink wrapped, or protected with a properly fitted canvas cover. The cover should be fastened securely so that winds cannot remove it or cause it to chafe the boat. A poor covering job will eventually cost more than the price of a well-made cover.

⚠ CAUTION

Boats covered with plastic shrink wrap during storage must leave the fuel vent fitting outside of the enclosure to prevent the trapping of dangerous fumes.

Cleaning And Lubricating

Clean and wax your boat before storage. If you store your boat in the water, there may be a layer of growth on the bottom. As it dries, this debris will harden. Clean, scrub and scrape the bottom promptly when the boat is removed from the water. Remove all marine growth and other foreign matter from the hull. Clean the inside of hull openings, thru-hull fittings and scupper drains. Inspect the hull for damage. Avoid harsh cleaners, citrus solutions and bleaches; these could have harmful effects on your boat's gel-coat and metal components.

Check cleats and rails for corrosion and tightness. Clean stainless steel as directed under *"Hardware/Stainless Steel Rails" on page 6-5*. Use a quality metal preservative like T-9® on metal surfaces to prevent salt water damage. Check for loose silicone, hinges and unseated gaskets. Replace or tighten where necessary. Heavy seas pounding and twisting the hull can cause leaks in your windows, doors and hatches. Check hinges for corrosion. Lubricate hinges as necessary.

Draining And Water System

If the boat is stored out of water, remove the garboard drain plug to keep the bilge dry. Store your boat with the bow elevated for drainage.

Drain all water tanks, hoses, filters and pumps to prevent freeze damage. The freshwater system may be drained by running any faucet or shower until the tank is empty. When empty, turn the water pump off to prevent damage. Remove the filter on the freshwater pump inlet, remove any water and reinstall. Residual water will not damage the tank. The If desired, the freshwater system may have a non-toxic antifreeze for potable water systems added. To drain other systems, close seacocks and run the pumps until the lines are dry. Open the seacocks after lines are dry if the boat is stored out of the water. Draining will help prevent water stagnation in warmer climates.

Head System

Empty toilet and holding tank making sure all water is cleared. Reference Owner's Packet for manufacturer's information on winterization. After the toilet and holding tank are empty, pour a half gallon of marine grade antifreeze in the toilet bowl. Depress the flush button on the Head Control Panel. This allows anti-freeze to coat the lines and the holding tank with enough antifreeze for the winter.

Batteries

Fully charge the batteries before storing. A weak battery loses its charge more rapidly than a strong battery. Coat the battery terminals with grease or an anti-corrosion product.

Engines

See your engine Operator's Manual regarding the winterizing procedures. Follow instructions carefully, and your engine will withstand severe weather conditions. Change all filters. Check hoses and clamps. If you have developed any vibrations during the season, look for loose engine bolts, bent shafts or bent propellers.

Engine Flushing System

The Canyon 456 is equipped with a Reverso Engine Flushing System. To properly winterize this system, antifreeze must be pumped through for 8 minutes.

Fuel System

The fuel systems should be winterized by following the fuel system maintenance and fuel tank compartment instructions in the maintenance and service section. Tanks should be kept filled when the boat is not in use to reduce the accumulation of moisture and condensation. Add stabilizer to fuel that won't be used in 60-90 days. Use fuel stabilizer specifically designed for alcohol blended fuel if using E10 gasoline.

Storage Checklist

In addition to winterization guidelines the following checklist can be used as a guide for storing your boat. Additional details should be added as needed for your personal application.

- Remove all loose items and personal effects.
- Your compass should be covered for the winter. Ultraviolet rays from the sun will cloud the compass and make it difficult to read.
- Winterize all equipment as directed in the manufacturer's manuals.
- Store cushions indoors to prevent mildew.
- Clean the exterior and interior of the boat. Remove all grease, oil, salt spray, etc.
- Remove garbage. Clean storage areas, fish boxes, and livewells.
- Lubricate hinges, valves, drawer slides, and other surfaces that will rust.
- Check underwater items. Hardware should be in good condition and tight.
- Inspect electrical systems and have any repairs performed.

Getting Boat Out After Storage

Before placing your boat in the water for the boating season, have the hull bottom sanded and reapply anti-fouling bottom paint if necessary. Leave as much equipment and personal effects as possible off the boat until after launch and final check.

Prior To Launching

Start your own personalized list of items to check and perform prior to placing your boat in the water. The following list will give you some ideas and suggestions:

- Check all gear and replace if necessary.
- Check thru-hull fittings for cleanliness, damage, and tightness.
- Check prop installation and tightness.
- Clean battery terminal posts with a wire brush or bronze wool. Apply a light coating of grease or anti-corrosion product to posts.
- Check all wire connections for contact corrosion and tightness.
- Check hull seacock ball valves for easy operation and for condition of hose.
- Check operation of bilge pumps in manual and automatic modes.
- Check shower sump pump.
- Check operation of all electrical circuits.
- Check the hoses on the freshwater system, and close all valves, fill freshwater system and check for leaks. Test marine head system.
- Perform maintenance on engines according to the manufacturer's manuals prior to returning them to service.
- Check safety equipment including flares, fire extinguisher and first aid kits. Replace items as necessary.

After Launching

- With the boat in the water, check all sources of possible leaks stem to stern.
- Thoroughly check the fuel system including hoses, fittings, connections, valves, and filters for leaks.
- Connect to shore power and check all electrical equipment operation.
- Test run engines and generator as directed in manufacturer's manual.

CHAPTER 8: CANYON 456

Specifications

Beam-amidship	14 ' (4.27 m)
Centerline Length w/o Engines	45 ' (13.72 m)
Bridge Clearance	10 ' 5 " (3.18 m)
Cockpit Depth	28 " (0.71 m)
Freshwater Capacity	80 Gallons (265 L)
Fuel Capacity - Main (Fwd)	308 Gallons (1400.2 L)
Fuel Capacity - Aux (Aft)	308 Gallons (1400.2 L)
Hull Draft	30 " (76 cm)
Engine Shaft Length	Outside Port: 25 " (64 cm) Center Port: 35 " (89 cm) Center Starboard: 35 " (89 cm) Outside Starboard: 25 " (64 cm)
Engine Mounting Position	Quad F425 Mounting Hole: 4th Hole from Top
Transom Width	12 ' 1 " (3.68 m)
Dry Weight w/o Engines	24,500 lb (11,113 kg)
Outboard Max HP	1700 HP (1270 kW)

CZone Switching

General Layout and Operation

The Canyon 456 is equipped with CZone, a digital switching system for controlling electric devices and power supply through two LCD touch screens. These screens are located at the helm (5" display) and in the cabin (10" display). You can control all of the electrical systems that are on CZone (AC/DC) through the "ALL" tab or through AC or DC tabs on the touch screens. The CZone system uses a network of interfaces throughout the boat that have designated breakers (AC) or fuses (DC) to provide power and overcurrent protection for each component. The boat has a total of eight of these interfaces. (See CZone Backbone Insert for layout of entire system.)

On the DC side of the electrical system, there are Output Interfaces (OI), Motor Output Interfaces (MOI), and Combination Output Interfaces (COI) which provide the power supply, control and fusing for a circuit. There are two interfaces in the hardtop, a MOI and a OI. These control the accessories found on the hardtop including the down lights and the electric mast light. In the companionway, behind the soft panel on the port side, there are three units that control all of the cabin accessories as well as the push button helm switches. There is a COI, OI, and a Signal Interface (SI). There is one interface controlling all of the accessories located in the cockpit and the rigging area. The COI is located on the starboard side of the aft rigging area.

Each of these interfaces provide over-current protection for the DC electrical components controlled by the CZone screens. Also, in the situation where the electric device would need to be manually overridden, these interfaces can provide a means to do that. On all of the DC interfaces (OI, MOI, COI) there are two positions that the fuse can be placed in. The lower position for normal operation through CZone and the upper position is for manually overriding Czone and sending power directly to the device. After the DC component is used or the override is no longer needed, return the fuse to the lower position, as this is a requirement for CZone to operate correctly.

The CZone AC system uses two components to control the AC electrical accessories. The AC Mains Interface (ACMI) is located in the Lean Bar. This is the unit that controls all of the AC systems in the cockpit. Access to this unit is through the door on the forward side of the Lean Bar. The ACMI also handles the switching of the AC power supply from the shorepower inlet and generator. The AC Output Interface (ACOI) that has breakers for accessories in the cabin is located behind the door inside the hanging locker.

On the ACMI and ACOI there are small, black override switches at the top of each interface. When flipped down, they will provide a manual override of CZone for each AC component. Just like the DC components the manual override has to be switched off for the system to operate normally. Consult your dealer for specific information or questions on the accessories included on your boat and how to operate them.

The CZone system on the Canyon 456 is equipped with specific Auto-On accessories. These accessories will turn on automatically whenever CZone is powered up. This is normally done by pressing the #1 button on the CZone keyfob, which turns on the house battery select switch. The AC accessories that Auto-On, when AC power is available, are the three battery chargers, and the outlets located in the console and the lean bar. These systems will also stay on when powering down the CZone system using the keyfob, as long as AC power is available. This allows the use of these items without the CZone switching system being on. There are also two DC accessories, the shore power cord reel, and the shower sump box. These items are only operational when the battery select switch is on.

Transferring AC Power

When using any AC electrical device, power is being supplied from either the generator or shore power. To transfer between these two power sources follow these steps:

1. Turn off all AC components through the AC control tab on either of the CZone panels.
2. Go to the AC Mains tab on the display.
3. Select either the Generator or Shore Power breaker icons to connect to that AC supply source.
4. If AC supply is coming from either of these sources the corresponding icon will have a blue ring when active.
5. Turn on the AC component that you want to operate.

Monitoring

When the status of the multiple systems is needed there is a tab on the CZone panel, "Monitoring", that provides this information. The monitoring tab can be found on the left side of the screen, along with the control tab, and AC mains. The information on this tab includes: battery voltage, fuel levels, water level, shore power voltage and amperage readouts, and battery charger output.

AC Powered Accessory Switches

- **Air Con Cabin**
  This switch supplies power to the cabin air conditioner control panel. Operation of the unit is only affected by adjustments made on the unit's control located on the panel above the hanging closet in the cabin.
- **Air Con Helm**
  This switch supplies power to the helm air conditioner control panel. Operation of the unit is only affected by adjustments made on the unit's control located on the panel above the hanging closet in the cabin.
- **Air Con/ Cooler Box Water Pump**
  This switch provides power to the pump relay which in turn powers the pump for the air conditioners and cockpit cooler.
  Note: CZone automatically turns this accessory on anytime an air conditioner or cooler box is turned on.
- **Battery Charger Port**
  This switch operates the on-board battery charger for the two port engine batteries and two of the house batteries.
- **Battery Charger Stbd**
  This switch operates the on-board battery charger for the two starboard engine batteries and two of the house batteries.
- **Battery Charger Thruster**
  This switch operates the on-board battery charger for the two battery bow thruster bank.
- **Cockpit Cooler Box**
  This supplies power to the control panel for the condensing unit for cooling the Aft Fishbox.
- **Galley Refrigerator**
  This switch supplies power to the refrigerator in the cabin.
  Note: The refrigerators on the 456 are dual voltage and will default to AC power when available.
- **Grill**
  This switch supplies power to the grill located in the starboard side of the lean bar.

- **LB Refrigerator**
  This switch supplies power to the refrigerator in the leanbar.
  Note: The refrigerators on the 456 are dual voltage and will default to AC power when available.
- **Microwave**
  This switch provides power to a receptacle dedicated for the microwave.
- **Outlets #1 & #2**
  These switches provide power to two outlets, one on the port side of the leanbar and one in the cabin.
- **Stovetop**
  This switch provides power to the two burner stove in the cabin galley.
- **SureShade**
  This switch controls the Sure Shade. Pushing down on this switch extends the SureShade, and pushing up on this switch retracts the SureShade into the top. The SureShade can be stopped at any point in the range of travel, and direction may be reversed without fully extending or retracting. The SureShade comes with a Bluetooth equipped controller that allows you to control the SureShade with any compatible smartphone. See your SureShade manual for further instructions about this feature.
- **Water Heater**
  This switch activates the 11 gallon (42 L) water heater. Always insure there is water in the freshwater system and the freshwater pump is switched on before turning on the water heater.

DC Powered Accessory Switches

- **Anchor Light**
  This switch turns on and raises the all-around mast light.
- **Berth Lights**
  This switch operates the lights in the forward berth.
- **Bilge Blower**
  This switch operates the bilge blower.
- **Bilge Lights**
  This switch operates the lights in the aft rigging compartment.
- **Aft Bilge Pump**
  This switch operates the aft bilge pump.
- **Forward Bilge Pump**
  This switch operates the forward bilge pump.
- **Cabin Accent Lights**
  This switch operates the lights on the sides of the cabin.
- **Cabin Galley Lights**
  This switch turns on the lights under the galley cabinets.

- **Cabin OH Lights**
  This switch turns on the overhead lights for the cabin.
- **Cockpit Lights**
  This switch turns on the cockpit lights which provide illumination in the cockpit and helm areas.
- **Discharge**
  This switch provides power to the holding tank panel in the head which controls the discharge pump on the holding tank.
- **Down Lights**
  This switch turns on the T-Top down lights. There are two color options (blue and white).
- **Fresh Water Pump**
  This switch powers the pump for the pressurized freshwater system. This switch also powers the freshwater level indicator in the head area.
- **Galley Refrigerator**
  This switch supplies power to the refrigerator in the cabin.
  Note: The refrigerators on the 456 are dual voltage and will default to AC power when available.
- **Head Lights**
  This switch turns on the overhead lights in the head compartment. These lights can also be controlled by the switch in the head compartment.
- **Horn**
  This momentary switch activates a horn which meets the requirements of the USCG for sounding devices.
- **LB Refrigerator**
  This switch supplies power to the refrigerator in the leanbar.
  Note: The refrigerators on the 456 are dual voltage and will default to AC power when available.
- **Port Livewell Pump**
  This switch turns on the port livewell pump in the seachest.
- **Starboard Livewell Pump**
  This switch turns on the starboard livewell pump in the seachest.
- **Navigation Lights**
  This switch activates the red and green navigation lights as well as the mast light.
- **Seachest Seacock**
  This switch will open or close the raw water seacock that supplies raw water to the entire boat.
  Note: This seacock must be open before running any raw water accessory.
- **Seakeeper**
  This switch supplies power to the Seakeeper control panel but it does not engage the unit.

- **Shower Sump Pump**
  This switch provides power to the pump located in the shower sump under the shower floor grate. The pump will not run until activated by the float switch.
  Note: This switch defaults to ON when the battery select switches are turned on.
- **Spreader Lights**
  This switch operates the two flood lights in the cockpit as well as the flood light at the lounge seating area. When the lights are turned on they will increase in intensity until they reach maximum illumination. To operate the lights at a lower intensity, turn on the lights, let them get to desired brightness, then turn them off. When they are turned on again they will be at that brightness. To reset the brightness level, simply turn off the lights.
- **Marine Head**
  This switch provides power to the vacuum pump integrated within the head system, allowing the Vacuflush® marine head to operate.
- **Underwater Lights**
  This switch turns on the underwater lights.
- **Vanity Lights**
  This switch turns on the lights on the head vanity. These lights can also be controlled by the switch in the head compartment.
- **Raw Water Washdown Pump**
  This switch pressurizes the raw water washdown pump, which pressurizes the raw water washdown system.
- **Discharge Seacock**
  This switch will open or close the holding tank discharge seacock.
  Note: This seacock must be open before operating the holding tank discharge pump.

Helm Switch Panel

At the helm you will find a single panel with six toggle switches (port) and six push-button switches (starboard). Each one of these items has a dedicated fuse located behind the soft panel on the port side of the companionway. The six push button switched are integrated with CZone and provide an additional, readily accessible means for controlling these circuits. See *"456 DC Accessory Wiring Color - Fuse/Breaker" on page 6-13* for over-current protection amperage ratings for each circuit.

- **Port Vent**
  This toggle switch controls the sliding port window vent for the top enclosure.
- **Stbd Vent**
  This toggle switch controls the sliding starboard window vent for the top enclosure.
- **Sunroof**
  This toggle switch controls the sunroof sliding glass. Pushing down on this switch opens the sunroof and pushing up closes the sunroof.

- **SureShade**
  This switch controls the Sure Shade. Pushing down on this switch extends the SureShade, and pushing up on this switch retracts the SureShade into the top. The SureShade can be stopped at any point in the range of travel, and direction may be reversed without fully extending or retracting.
- **Wiper Control**
  This switch controls the wiper speed and the washer function. See page 8-24 for instruction.
- **Wiper On**
  This switch supplies power to the wiper motor. See page 8-24 for instruction.
- **Horn**
  This switch activates the horn.
- **Nav Lights**
  This switch activates the red and green navigation lights, as well as turning on and raising the mast light.
- **Anchor Light**
  This switch turns on and raises the all-around mast light.
- **Aft Bilge**
  This switch turns on the aft bilge pump.
- **Fwd Bilge**
  This switch turns on the forward bilge pump.

Raw Water Systems

CAUTION

All seacocks should be in the "closed" position if not in use or if the boat is unattended for an extended period to prevent the taking on of water if a plumbing component fails.

Seachest

The Canyon 456 is equipped with a 7 gallon raw water reservoir plumbed to a 2.5" seacock that can be operated remotely with the seachest seacock switch in the cabin.. This seacock and seachest supply water to all of the accessories that require raw water for operation, eliminating the need for multiple seacocks. The seachest has six outputs, each going to separate components (Port and Starboard Livewells, Air Con/Cooler Box Pump, Seakeeper, Raw Water Washdown, Generator). To avoid pressurizing the system, the seachest is vented to a fitting on the aft deck, forward of the engines. Please contact your dealer for any specific questions about this system.

CAUTION

The seachest seacock must be open before operating any accessory that requires raw water.

Note: See page 6-5 for proper maintenance of the Seachest.

Seacocks

The Canyon 456 is equipped with two electric seacocks, which can be operated remotely by the seacock switches in the cabin switch panel, by a valve control box, as well as manually. One of the seacocks is for the raw water system and one is for the discharge of the holding tank. The raw water seacock is located under the access hatch in the floor of the aft rigging area. The discharge seacock is located behind the access panel in the head on the starboard side, outboard of the toilet. To operate these seacocks remotely, use the seachest and discharge seacock switches in the cabin switch panel to operate the seacocks remotely. To operate these switches, press the side of the switch labeled "open" or "close" to move the seacock handle to that position. When operating the seacocks, wait 30 seconds to allow the seacock handle to cycle. The switch will illuminate green for open or red for closed when the cycle is complete. The valves can also be operated from the black control boxes equipped on the 456. These boxes can open and close the seacocks as well as detect high water in the bilge. The box for the raw water seacock is located on the starboard side of the aft rigging area. The control box for the discharge seacock is located in the same rigging area as the valve, outboard of the head.

Air Con/Cooler Box Pump

This pump supplies water to the helm air conditioner,cabin air conditioner, and cooler box condensing unit. It receives a signal from the pump relay for these units when they are operational. CZone supplies power automatically to the pump relay when any of these accessories are turned on.

Air Conditioners

The air conditioning system operates on AC current only. Therefore, the generator must be on or the shore power must be connected before use. On the CZone panel, turn on the "Air Conditioner" switch to supply power to the air control panel. The condensation drain for the helm air conditioning unit drains overboard and the cabin air conditioning unit drains to the shower sump box.

For the helm air conditioner unit, the control panel is located on the port side of the companionway above the CZone display. The unit is located on the port side of the leanbar behind the forward drawer unit. The helm air conditioner supplies air to seven vents. There are four at the helm and three in the cockpit, located at the base of the hardtop aft support structure.

The cabin air conditioner control panel is located directly beside the helm air panel, above the CZone display. The unit is located behind the return vent on the starboard side of the cabin. The return vent is directly across from the trash can unit aft of the berth. There are three supply vents in the cabin. They are located on the forward end of the starboard cabinet, two facing inboard and one facing forward for the V-berth.

Generator

The generator enables you to use AC accessories without being attached to shore power. A Fischer Panda™ model AC12 mini, capable of producing 11.2 peak kW (93A) and a constant 10.1kW (84A) is installed on your boat. A separate 30-gallon diesel tank, located in the aft rigging compartment, supplies fuel to the diesel generator. The diesel fuel level may be monitored using the CZone display.

⚠ CAUTION

The seachest seacock must be open before operating any accessory that requires raw water.

Generator Control Panel

The generator control panel is located in the cabinet next to the steps in the cabin. This panel is used to start and stop the generator as well as monitor its operation. To learn more about operating this panel, reference the Fischer Panda owner's manual in your Owner's Packet.

Amperage Requirements

The generator provides sufficient power to operate most accessories at the same time. A list of amperage requirements for all AC accessories is provided below. (On boats with 220V/50Hz systems the amperage draw is shown in parentheses). Monitor the amperage draw for each device on the CZone panel to properly manage the load on the generator. The generator is capable of handling momentary peaks above its rated capacity. These peaks are normally related to the start-up of each accessory. In addition to the factory installed appliances, you should know the amperage requirements of any household objects you bring onboard.

The amperage requirements of the Seakeeper can vary depending on the status of the spool up process, as well as sea conditions. The highest amperage requirement the Seakeeper will have is during start-up as shown in the table below. The Seakeeper spool up process can be started at the dock while still on shore power to reduce impact on the use of other AC devices. Please refer to *"Seakeeper" on page 8-11* for recommended spool up times.

• Air Conditioner-Cabin	11.7A	(5.9A) 50Hz	Running Amps
• Air Conditioner-Helm	11.7A	(5.9A) 50Hz	Running Amps
• Air/Cooler Pump	2.1A	(1.1A) 50Hz	Running Amps
• Battery Charger Port	8.0A	(4.0A) 50Hz	Maximum Amps
• Battery Charger Starboard	8.0A	(4.0A) 50Hz	Maximum Amps
• Battery Charger Thruster	2.0A	(1.0A) 50Hz	Maximum Amps
• Cockpit Cooler	6.6A	(3.3A) 50Hz	Running Amps
• Grill	10.8A	(5.4A) 50Hz	Maximum Amps
• Microwave	12.5A	(6.3A) 50Hz	Maximum Amps
• Refrigerator Galley	2.5A	(1.3A) 50Hz	Maximum Amps
• Refrigerator Leanbar	2.5A	(1.3A) 50Hz	Maximum Amps
• Seakeeper	19.2	(9.6A) 50Hz	Maximum Amps
• Seakeeper Pump	2.0A	(1.0A) 50Hz	Maximum Amps
• Stovetop *(per burner)*	10.0A	(5.0A) 50Hz	Maximum Amps
• Water Heater	12.5A	(6.3A) 50Hz	Maximum Amps

Generator Cover

A generator cover is included with the generator. This provides protection against the elements to prolong the life of the unit. It should be kept in place at all times except when servicing the generator.

Livewells

To operate the livewell, turn the switches on at the CZone control panel. The switches are designated port and starboard and operate independently. There are two 1500 GPH pumps in the seachest that provide water to each of the livewells. Water will enter through a plenum along the side of the livewell and be distributed through a series of holes arranged vertically along the plenum. The water will rise and eventually it will reach the overflow fitting and drain overboard when the plug is inserted into the bottom drain. Replacement of livewell pumps requires the removal of the Seachest lid. See page 6-5 for instructions on lid removal.

Raw Water Washdown

The Canyon 456 is equipped with a Glendinning electric hose reel with a 35' washdown hose. This hose reel is located in the lean bar on the starboard side. To use the washdown, first turn on the raw water washdown pump on the CZone panel. The pump will use water from the Seachest to pressurize the system. To deploy the hose, pull the spray nozzle out of the box and pull the appropriate amount of hose out. To retract the hose, push the switch directly above the washdown box. Continue depressing this switch until the spray nozzle is completely in the box. There are limit switches in the back of the box that stop the reel when the hose and nozzle are fully retracted.

Seakeeper

The 456 is equipped with a Seakeeper gyro stabilizer. The Seakeeper reduces up to 95% of the roll in the boat. It contains a gyroscope that is actuated to counteract the forces of the waves experienced by the boat. The Seakeeper is controlled by a panel at the helm. To activate the Seakeeper, turn on the accessory in CZone to supply power to the panel. To supply power to the unit, press the power button on the Seakeeper panel. The unit needs to spool up for at least 35 minutes to reach operating RPMs. To lock the boat in a stable position, press the image of the three ships. This activates the Seakeeper's anti-roll capabilities. Refer to your Seakeeper Owner's Guide for detailed operation instructions.

Note: If possible, turn on the Seakeeper with shore power while at the dock before departing to minimize spool up time underway.

Auxiliary Fuse Blocks

Three auxiliary fuse blocks are located behind the soft panel on the port side of the console companionway. They provides a source of power for electronics and other accessories. Your model utilizes the automotive type fuses.

Accessory Outlet - 12 Volt

Your boat is equipped with a 12-volt outlet located on the starboard side of the helm. This outlet provides an easily accessible power supply for accessories such as cell phones and spotlights.

NOTICE
This outlet cannot be used with a cigarette lighter.

Anchor Windlass

The anchor windlass includes a stainless steel bow roller. Please refer to the anchor windlass owner's manual for proper operation of the windlass. There are two control options for the windlass: A rocker switch at the helm and foot switches at the bow. The 456 comes with a rode kit that contains 50′ of 5/16″ G4 chain and 500′ of 5/8″ 8 plait rope.

Battery Chargers

The Canyon 456 is equipped with three battery chargers. There are two battery chargers on the bulkhead in the aft rigging area, forward of the Seakeeper. These two battery chargers are for the eight batteries for the engines and the house electrical system. The battery charger in the lean bar is for the two batteries in the lean bar, that form a 24V system dedicated to the bow thruster and windlass. The generator must be running or the shore power must be connected for the battery chargers to work. To activate, turn on the "Battery Charger" switch on CZone panel. There are three

switches in CZone for the battery chargers: Batt Charger Port, Batt Charger Stbd, and Batt Charger Thruster. The battery chargers have a built in isolator that sense the charging needs of the batteries and distributes charge accordingly. At the point that the batteries are nearly fully restored, the battery chargers will automatically reduce the current being sent to the batteries to a maintenance level. See the battery charger manuals in your owner's packet for further information.

Battery Select Switch

The battery select switch panel is located directly below the aft rigging lid on the forward side of the rigging compartment. There are 7 Battery Select switches on the panel. There is a switch for each of the engines and one for the house bank. To start the engines, the four engine select switches must be turned to the on position. These switches can all be turned on remotely through the CZone key fob by pressing the number 2 button on the fob. The house battery select switch must be on to operate any CZone feature as well as the switches on the helm instrument panel. This switch can be turned on remotely by pressing the number 1 button of the CZone key fob. In addition to the engine and house switches, there are two emergency parallel select switches for the engines. To use the emergency parallel switches, turn on the battery switches for each motor and then manually turn on the emergency parallel. These switches should only be used in emergency situations and should be returned to their off position after starting the engines. Note: Due to the fact that these switches can be turned on remotely, the switches have motors that drive them in both directions. To turn on the switch manually, depress the switch and then turn to prevent damage to the motor.

⚠ CAUTION

Never turn the battery select switch to the "off" position with an engine (including generator) running as this could damage the engine charging system or the generator control panel.

Bilge Pump/Float Switch

Your boat is equipped with automatic float switches adjacent to the bilge pumps. The float switch will enable the pump to come on automatically if a significant amount of water accumulates in the bilge. The float switches function independently of the battery select switches and can activate the bilge pump with the battery select switches in the "off" position. The bilge pumps are also equipped with switches at the helm. When a switch is in the "on" position, the pump will run continuously. When a switch is in the "off" position, the pump is off unless activated by the float switch. Bilge pumps should not be left on unless someone is monitoring the system and can turn the pump off when the bilge is dry.

⚠ CAUTION

To prevent damage to the bilge pump, do not run it dry for a prolonged period of time.

Bilge Pump Locations

Your boat has two bilge pumps. The aft bilge pump is located just forward of the transom and can be accessed through the motor well. The forward bilge pump is located directly behind the shower sump. This pump can be accessed through the shower sump access floor in the head compartment.

Bow Thruster

The bow thruster aids in maneuvering your boat by providing propulsion in the forward keel. Use the Lewmar joystick control located at the helm to control the bow thruster by pushing the joystick in the direction you want the bow to move. The electric motor will turn the propeller the appropriate direction providing thrust. The emergency shut-off switch, located at the helm, provides a simple method to quickly disconnect power from the bow thruster motor. Depress this button to disengage the bow thruster in the event of an emergency.

⚠ CAUTION

To avoid damaging the sheer pin in the bow thruster lower unit, do not engage the thruster when the propeller is not submerged. Also, do not suddenly change direction of thrust without allowing the propeller time to stop.

Cabin Lights

The “Cabin Lights” switch on the CZone panel supplies power to the lights in the cabin. There are four manual switches located in the cabin. The two on the port side of the companionway control the aft and forward overhead lights. The two switches located on the port side, aft of the berth, control the forward overhead lights and the berth lights.

Carbon Monoxide Detector

The carbon monoxide detector in the cabin serves as a warning system for exposure to poisonous carbon monoxide fumes. Carbon monoxide is a colorless odorless gas produced in the exhaust of combustion engines. It can accumulate in amounts that may be hazardous or fatal. This accumulation may occur very quickly from engine exhaust entering the boat due to wind currents, low pressure areas in the cabin, or other means of air movement. The source of CO may be your boat or another boat adjacent to it, so exercise caution when in the proximity of other vessels with propulsion engines or generators in operation. For proper operation and maintenance, refer to the literature provided by the manufacturer in your Owner’s Packet. Ensure that the CO monitor is activated by pressing and holding the TEST/MUTE button for 10 seconds (Green LED will flash). To test the CO monitor press the TEST/MUTE button five times (LED's will flash and alarm will sound). .

⚠ WARNING

End-of-Life (EOL)
The carbon monoxide detector is powered by a dedicated, sealed lithium ion battery, and is not user serviceable. The permanent battery is made to last the life of the unit, approximately 7 years. When the unit reaches EOL status it will no longer flash any indicator lights and there will be an audible beep once every 60 seconds, indicating the entire carbon monoxide detector should be replaced.

Cockpit Freshwater Showers

There are two cockpit showers, one on the aft starboard gunwale and one on the forward port gunwale. Before using the cockpit showers, the "Freshwater" switch must be on in CZone. Open the cover and pull the shower wand from the recessed deck fitting. Depress the button on the back of the wand to spray water. To reinstall the shower wand, pull up slightly on the hose and then let the spring loaded unit retract the hose until the wand is back in the recessed deck fitting. To supply hot water to the aft cockpit shower, make sure the hot water heater is on and then adjust the knob directly aft of the cockpit shower recess to adjust the temperature.

Compass

The compass is located at the helm station in direct view of the operator when navigating the boat. Follow the compass instructions included in your Owner's Packet to make compensation adjustments.

Cockpit Cooler System

The aft fishbox can be used as a refrigerator or a freezer. The "Cockpit Cooler" switch on the CZone panel must be "on" to cool this box. The raw water moving through the system will allow the refrigeration unit to cool the box more efficiently.

The temperature of this box is determined by designating the set point temperature. Establish the set point using the digital temperature switch in the cooler control panel located on the insert panel on the port side of companionway. To establish the set point, first press and hold SET — "SET" will appear on the display and then the current value will appear on the display. Change the temperature set point to the desired value using the up and down arrows. Press set again when the desired set point is displayed to enter this value.

Downrigger Outlets

There is a 12V power supply under the gunnel that can be utilized for electric reels or electric downriggers. A 60A breaker for overcurrent protection is located on the forward wall of the aft rigging area. If you do not have power to your receptacle, make sure that the breaker is not tripped.

Engine Flushing System

The onboard engine flushing system is used to clean the cooling water passages of your engines using a garden hose and tap water. To operate this system, do the following steps:

1. Screw the garden hose adapter included in your owner's manual packet onto a garden hose that is connected to an external freshwater supply.
   Note: The freshwater system on your boat is not a suitable water supply for the engine flushing system; it will not supply enough water or pressure to properly flush the engines.
2. Next, locate the engine flush panel on the aft wall of the cockpit and connect the garden hose to the fitting on the panel.
3. With the engines off, turn on the water supply, and press the start button one or two times for a 15 minute or a 7.5 minute flush, respectively.

Once the engine flushing system starts, it will automatically flush each engine one at a time, starting with the outboard starboard and moving to the next engine as each one is complete. When the last engine is finished the system will automatically turn off. Follow the engine manufacturer's recommendations for duration and frequency of flushing. The water supply does not need to be turned off before disconnecting the garden hose from a fitting. When flushing the engines when your boat is in water, tilt the engines up to achieve better results.

The engine flushing system is equipped with a service mode that provides the capability of turning on/off each engine's flushing sequence manually. To enter the Service Mode, hold down button for 3-5 seconds until the LED flashes blue and then turns off. To manually cycle/test engines, press the button once for each outboard: First press flushes engine 1, second press flushes engine 2, third press flushes to engine 3, fourth press flushes engine 4. On the last engine, press control once to exit service mode. To exit Service Mode at any time during operation, hold down button for 3-5 seconds until it flashes red.

Fender Holders

Your boat is equipped with Phender Pro fender holders. There are six receivers and two pins. The Phender Pro holders allow the easy movement of fenders on the boat without having to remove it from a cleat. The pins have a push-button that clicks in place when fully engaged with the receiver.

Freshwater System

The 456 comes with a pressurized freshwater system. The freshwater pump is activated by the freshwater switch on the CZone panel and supplies water from the 80 gallon (302.8 L) water tank to the freshwater components on board. The freshwater pump is located underneath the shower floor insert in the head. The water tank is located underneath the console floor. Water from the freshwater tank is distributed to the cockpit shower, leanbar sink, galley sink, head sink, and fresh water washdown in the bow. The freshwater system also supplies water to the water heater.

⚠ CAUTION

The freshwater system is not a potable water source. Do not use the water from the freshwater outlets on your boat for drinking purposes. The quality of the water is dependent upon the cleanliness of the water and other components of the freshwater system. The label pictured below can be found at all freshwater and raw water outlets on your boat. Contact your dealer for replacement labels.

Forward Freshwater Washdown

To operate the freshwater washdown system on the port side of the bow, turn on the "Freshwater" breaker on the CZone panel. This system will now be pressurized at the freshwater outlets. A hose with a spray nozzle attached may be used intermittently without turning the switch off in the same fashion as a garden hose with a nozzle. The freshwater pump has an internal pressurization switch that will maintain water pressure as needed until the switch is turned off at the CZone panel.

Grill

The shore power must be connected or the generator must be on to use the grill. Once AC power is available, turn the "Grill" switch on the CZone panel to the "on" position to supply power to the grill. To heat the grill, press the "ON/OFF" button on the grill and set to the desired temperature. Refer to the grill owner's manual in your Owner's Packet for specific instructions on the safe and proper use of the grill.

Head Shower

To use the head shower, turn on the "Freshwater Pump" switch on the CZone Panel. This will provide pressure to the hot and cold water supplies. To supply hot water to the shower, make sure the water heater is on. Water flow is controlled by the head shower fixture.

High Bilge Water Alarm

Your boat is equipped with a high bilge water alarm. Although some residual accumulation of water in the bilge is normal, this alarm will alert you if water reaches a high level that could impair operation of the boat or be damaging to equipment. It is activated by a float switch located in the rigging area under the shower floor grate. This float switch is separate from the bilge pump system and only activates the high bilge water alarm. The alarm panel provides both audible and visual alert signals. This panel is located inside the console, on the forward side of the closet in the companionway. The "Audible Alarm On" position is the recommended position to leave the switch. When activated, the red light on the switch will be on and a high pitched tone similar to that of a home smoke detector will sound. With the switch in the "Audible Alarm Off" position, the red light will be the only indication of a high water situation. Should the high bilge water alarm activate, immediately investigate to determine the source of water entry. Also, confirm your bilge pumps are working properly. If the situation cannot be quickly resolved, contact your dealer and remove the boat from the water.

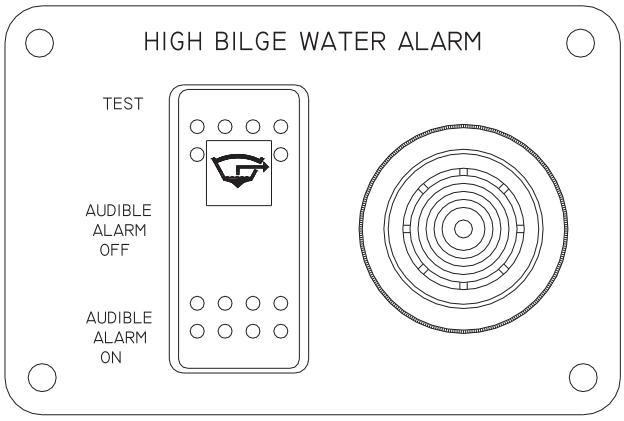

Main Circuit Breaker

A 100A circuit breaker is located in the panel with the battery select switches. This is the main breaker protecting the wiring supplying power to the helm switch panels. If this breaker is tripped, the yellow trip lever will be positioned vertically. Slide the trip lever back to a horizontal position to reset it.

Microwave

The shore power must be connected or the generator must be on in order to use the microwave. To supply power to the microwave, place the Microwave switch on the CZone panel in the “on” position.

Outlets

These accessories are located inside the console on the port side above the countertop as well as the port side of the leanbar. The outlet is a ground fault protected outlet and will operate any standard household appliance (i.e. blender, coffee maker).

Refrigerator

The 456 is equipped with two refrigerators, one inside the console and one on the starboard side of the leanbar. The refrigerator switch on the CZone panel and the thermostat knob inside the refrigerator must be on for the refrigerator to operate. The manually operated thermostat is located on the right upper rear wall. Turn the thermostat clockwise to reduce the temperature and counterclockwise to increase the temperature.

To turn off the refrigerator, turn the switch on the CZone panel off or rotate the thermostat counterclockwise until it reaches the “0” position. Note that there will be resistance at the “1” position and the knob will need to be pushed in while turning to “0”. Refer to the refrigerator owner's manual in your Owner's Packet for specific instructions on using and maintaining this unit.

The refrigerator installed on this boat is capable of running on either AC or DC power. If shore power or the generator is connected, turn on the Refrigerator breaker on the AC side of the panel. If these sources are not available, the refrigerator will operate on battery power by turning on the breaker on the DC side of the panel.

Scanstrut Charger

A wireless phone charger and holder is installed on this boat, located at the helm. This device provides a means of securing and charging your phone when the boat’s battery select switches are on. For the charger to function properly, your phone must be equipped with Qi-certified wireless charging technology.

Shore Power

The shore power feature allows the use of AC equipment on board the boat. This equipment includes any permanently installed appliances such as a battery charger or water heater, or it may be a household item plugged into a receptacle. The shore power is utilized by connecting the retractable heavy-duty cable supplied with the boat to an appropriate external power source. The CZone panel allows for power distribution to the various appliances and outlets.

Connecting The Shore Power

1. Verify that the external power is a 4-wire grounded system with amperage and voltage ratings compatible with the boat's AC system ratings (50A, 125/250V).
2. Be sure there is sufficient cable length to allow for normal movement between the boat and the dock. The Canyon 456 is equipped with a 35ft retractable shore power cable.
3. Turn the breaker at the dock outlet to the off position.
4. Connect the shore power cable to the dock outlet and turn the dock outlet breaker to the "on" position.
5. Ensure the ELCI breaker is in the "on" position.
   Note: The ELCI should be tested monthly by cycling the switch on the box on the port side of the aft rigging area.
6. Select "Shore Power" on the AC Mains tab on the CZone panel to start the flow of electricity to the boat.

⚠ WARNING

If the reverse polarity indicator on the CZone panel is activated, immediately disconnect the shore power cable and have a qualified electrician correct the fault.

Disconnecting The Shore Power

1. Turn all CZone switches off before disconnecting shore power.
2. Turn the breaker at the dock outlet to the off position.
3. Disconnect the shore power cable at the dock outlet.
4. Retract the shore power cord using the switch on the aft cockpit wall on the engine flush panel. Feed the cord into the deck keeping it straight and under slight tension to avoid bending the reel.

NOTICE

Keep inlet cover closed tightly when not in use.

Shower Sump

The shower sump is located underneath the shower drain floor and can be accessed through the shower floor insert. The "Sump Pump" switch on the CZone Panel must be on for the sump pump to operate. The shower sump defaults to on when CZone is powered up, and is only OFF if turned OFF manually. The shower sump collects and discharges drainage from the head shower and condensation from the cabin air conditioner. The sump pump should be turned on whenever either are in use. The shower sump contains a filter which should always be installed when using the shower to prevent the sump pump from becoming clogged. Similar to a bilge pump, the sump pump is activated automatically by a float switch to discharge the collected water overboard via a thru-hull. See *"Shower Sump" on page 6-11* for maintenance information.

Shore Water

Your Canyon 456 is equipped with shore water plumbing. Simply attach any shore water supply to the freshwater inlet located on the aft deck, forward of the engines. The shore water plumbing bypasses the freshwater pump and tank installed on your boat. Therefore, the freshwater switch on the CZone panel does not have to be on when connected to shore water. All freshwater features on your boat are available for use when connected to shore water without depleting the supply in your water tank.

Steering

Your Canyon 456 is equipped with Quad Yamaha XTO 425 outboards with electric steering. The engine ignition panel must be ON for the steering to operate. There is no maintenance required for the steering system. For any questions regarding the steering system on the 456 consult your Yamaha Outboard manual or your dealer.

Stereo

The stereo is equipped with Apple AirPlay® and built-in Wi-Fi and Bluetooth®. The stereo is capable of doing over-the-air software updates on a touchscreen display. The stereo also includes advanced SiriusXM-ready features. There are two head control units on the boat. The head unit at the helm controls the eight speakers in cockpit. There are two subwoofers in the aft section of the cockpit, four speakers in the hard top as well as two in the bow. The head unit in the cabin controls the three interior speakers.

Two amplifiers are located behind the trash can in the leanbar rigging area. These amplifiers operate the speakers in the bow and the cockpit. Refer to the stereo owner's manual in your Owner's Packet for specific instructions on using this unit.

To make the stereo head units crossfeed, change the Helm stereo input (from FM, AM, Bluetooth, etc) to AUX 1. The Cabin Stereo Zone 4 output (labeled HELM FEED) will automatically send whatever is playing on the Cabin unit to the Helm. Reversing the process will allow Zone 4 at the Helm to feed the AUX 1 input in the Cabin.

TV/HDMI

The television is a 32" (81 cm) flat screen LED unit. It is located on the forward wall inside the console. Included with the TV package is an HDMI input. The input is located next to the 120V outlet on the port side of the cabin. The HDMI input allows the use of external devices to be displayed on the TV. To use the HDMI input on the TV, change the source on the TV to HDMI 1. The stereo on the boat can be used to broadcast the audio from the TV. To use this feature select the appropriate AUX input on the stereo depending on the options equipped on the boat.

Hardtop Enclosure

The hardtop enclosure on the Canyon 456 is equipped with three vents that provide natural ventilation to the helm (Port and Starboard Vent, Sunroof). There are designated locations on the hardtop for equipment such as radar and GPS units. Do not use the top for storing heavy or large items such as a raft. The frame for the top is designed for continual use with antennas, radar, and outriggers. The additional weight caused by larger items such as a raft may cause damage to the frame structure.

Trim Tabs

Your Canyon 456 is equipped with Zipwake's Dynamic Trim Control System. This system includes four interceptors, an outboard and intermediate on each side of the transom. These interceptors are electrically actuated and are controlled via a display at the helm. The interceptors, when active, will receive a signal from the control unit and deploy a plane down into the water creating a force that moves the stern of the boat up, forcing the bow down. There are two modes for the Zipwake system. The Automatic Pitch Control as well as the Manual Attitude Control. The system normally operates in automatic control mode, which is enabled by a single press on the AUTO button. In this mode, the built-in high-frequency GPS, 3D gyro sensors and motion controller automatically ensure dynamic elimination of uncomfortable and dangerous boat pitch and roll. The automatic mode can control the pitch and roll of the boat without user input. In manual operation the boat's attitude can be adjusted using the control wheels on the unit at the helm. Please see your Zipwake owner's manual for detailed instructions on how to properly operate and maintain your dynamic trim control system.

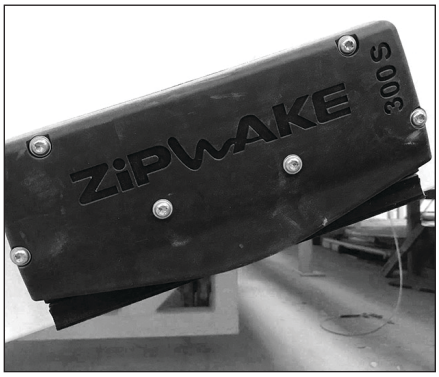

USB Charging Outlets

Your boat is equipped with four USB charging outlets. One is located in the port bow, one at the helm, and two inside the cabin. These outlets provide easily accessible power supplies for charging accessories such as cell phones and tablets.

Vacuflush® Head System

The VacuFlush® head system consists of a vitreous china bowl, a vacuum pump with tank, holding tank, and two control panels. To operate the head, the head and freshwater switches on the CZone panel must be in the "on" position. This provides power to the vacuum pump, and pressurizes the freshwater system. Since this unit uses freshwater, it is not necessary to open a seacock prior to use. Instructions on the operation of your VacuFlush® head are as follows:

1. Verify that the switches on the CZone panel are in the "on" position.
2. To add water prior to flushing, push the "Add Water" button on the Vacuflush ®control panel until the desired level is reached.
3. To flush, hold the flush button on the Vacuflush® control panel until contents clear the bowl.

NOTICE
Do not dispose of sanitary napkins or other non-dissolving items in the toilet. Also, do not attempt to flush facial tissue, paper towels, or large quantities of toilet paper.

Located on the aft wall of the vanity is a level monitor and discharge control panel which displays the fill level of the holding tank. When the tank is full, it can be discharged overboard or emptied through the deck pump-out fitting. Following are instructions on both operations:

Deck Pump-out

1. Remove the cap from the deck pump-out fitting located on the starboard gunnel.
2. Connect a vacuum hose from a pump-out station to the deck fitting and run until the tank is empty.
3. Replace the cap on the deck pump-out fitting.

Overboard Discharge

1. Press the "open" side of the discharge seacock switch on the cabin switch panel. This will open the Holding Tank Discharge Seacock and the switch will illuminate green when fully open. If you need to operate the valve manually, the valve is located in the head rigging compartment on the outboard side of the head. An access panel is provided in the wall next to the toilet.

Note: Wait at least 5-10 seconds before discharging overboard to allow the seacock to fully open.

2. Place the "Head" and "Hold Tank Discharge" switches on the CZone panel in the "on" position.

3. Engage the pump using the key switch in the tank manager panel. Turn the switch to the "start" position momentarily and release. The key will return to the "auto off" position. The discharge pump will run until the tank manager panel indicates the tank is empty.
4. Turn "Discharge" off on the CZone panel and the Seacock will close automatically.

Service Mode

The 456 VacuFlush head system is equipped with a service mode. This allows for the cleaning of the bowl or performing other services without running water. To enter service mode, push the service button for three (3) seconds. The service button will blink while in service mode. To return to normal toilet operation, push the service button for three (3) seconds.

NOTICE
Overboard discharge seacock must be secured in the "closed" position in accordance with the laws in your boating area.

Water Heater

The shore power must be connected or the generator must be on in order to use the water heater. To activate, turn on the "Water Heater" switch on the CZone panel. This will provide hot water to the pressurized freshwater system. The water heater can be accessed through the wall on the forward side of the berth behind a soft panel.

The water heater is preset from the factory to deliver water at 120° Fahrenheit. It is recommended that the thermostat not be adjusted to avoid the possibility of scalding.

⚠ CAUTION
To avoid heating element failure, do not turn on the water heater unless it is filled with water.

Windshield Washer Solenoid

There are two switches at the helm that control the wiper system. The "Wiper On" switch provides power to the system. The wiper will operate until the "Wiper On" switch is turned off. The "Wiper Control" switch controls the speed and washer function of the wiper system. To use the washer function, the freshwater pump must be turned on.

1. Push up "Wiper On" switch at the helm switch panel.
2. Turn on wiper control.
   - **1 push and release:** Intermittent
   - **2 push and release:** Slow
   - **3 push and release:** Fast
   - **4 pushes:** Returns to intermittent
   - **Push and hold** is washer function

Operation Of Optional Features

Bow Shade

If equipped with the bow shade canvas option, there are four carbon fiber poles and four receivers, located in the forward part of the bow on the gunnel. On the hardtop there are three fastening points for the straps on the canvas. The canvas is custom fit to the boat, and is attached at seven points: the four poles and the hardtop fastening points. The bow shade is designed to work in three configurations: the full bow shade deployed, only the forward half deployed, or only the aft section deployed. To assemble for the full shade configuration, zip the two halves together and insert the poles into the designated receivers and attach the D-rings on the canvas to the poles. After doing this, take the straps on the opposite end of the canvas and attach them to the hardtop. To tighten the canvas, pull on the strap to achieve the desired tension. The bow shade should not be used underway. Refer to *"Maintenance of Canvas" on page 6-3*for proper care of the bow shade.

Outriggers

Outriggers allow you to spread the lines trolled from your boat and decrease the chance of entanglement.

- **Advantages**
  - Advantages of outriggers include: offering bait throughout a larger area behind the boat, placing bait out of the wake zone, automatic drop back following strikes (which allows for fish to completely accept bait), and a reduction in unnecessary twisting action characteristic of artificial bait.
- **Instructions**
  - Guidelines for proper installation and use are provided in your Owner's Packet.
- **Care and Maintenance**
  - Outriggers should be washed with freshwater, a mild soap and a soft cloth. The outrigger poles should be sprayed down with freshwater. Never use acidic or abrasive cleaners on outriggers.
  - During assembly, grease all threads, bolts, and tubes where one section is inserted into another. Once a year disassemble and regrease all applicable surfaces.
- **Operation**
  - To change the angle of the outrigger, rotate the handle in a clockwise manner to raise and counterclockwise to lower.
  - To rotate the position of the outrigger poles, flip the handle 180 degrees towards the center of the outrigger base. Rotate the handle until the outrigger pole is in the desired location. Flip the handle 180 degrees again to lock the poles in position.

Safety Labels and Location

The safety labels shown below for this model should be inspected regularly. To ensure safety in normal operation, replace any labels on your boat that become damaged, missing or weathered such that they are no longer legible. Replacement labels may be obtained from any Grady-White dealer or by contacting the Grady-White customer service department at 252-752-2111 or custserv@gradywhite.com.

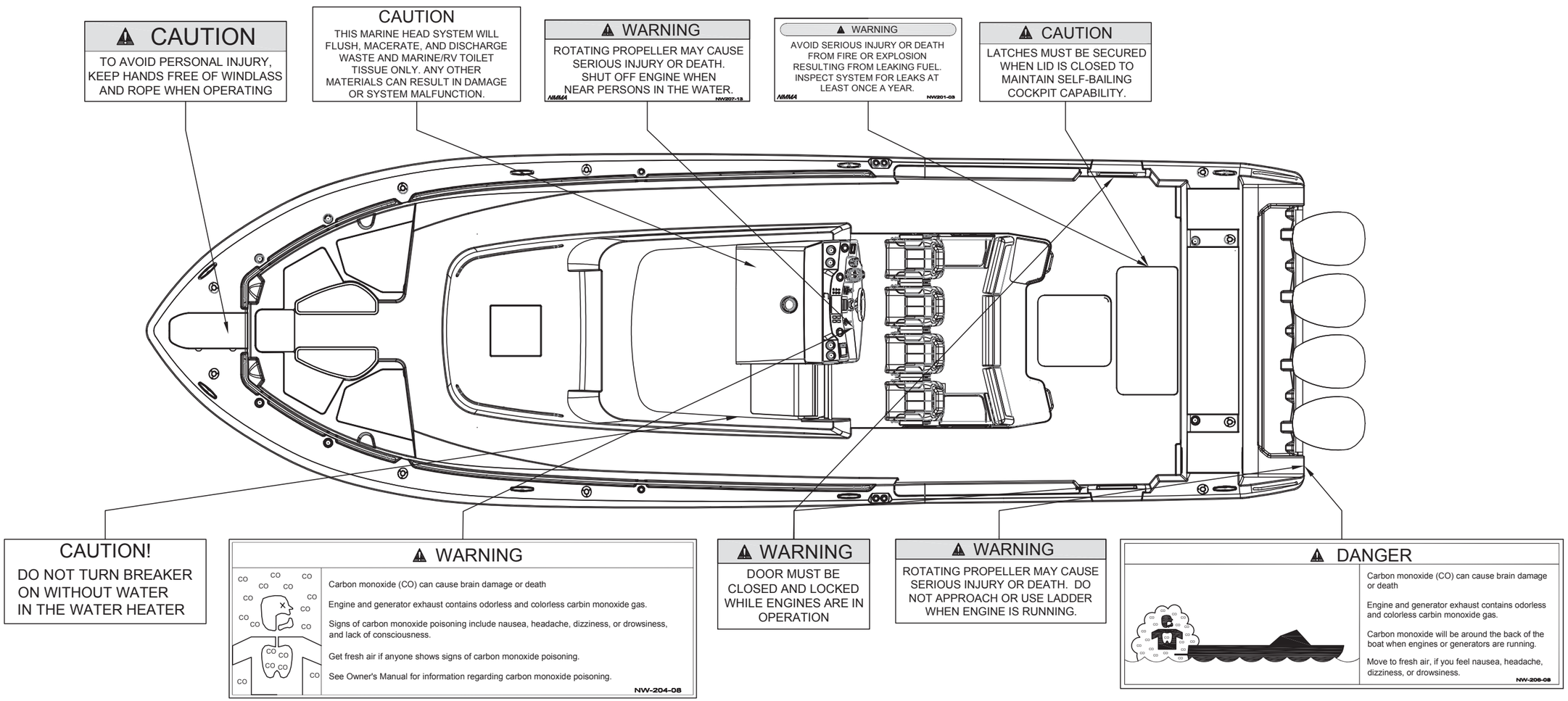

CHAPTER 9: LIMITED WARRANTY

Registration Of Purchase

The "Federal Boat Safety Act of 1971" requires all boat manufacturers to maintain a record of all first retail purchasers and their current addresses for the purpose of notification in case of defective parts or equipment or in case of non-compliance with standards or regulations set forth by this act. Under the act, failure to complete and return your factory warranty information for our records will waive your right to notification of defect and/or repair at manufacturer's expense. To ensure that this information is received, your Grady-White dealer is responsible for registering your boat at the time of delivery.

Five Year Hull Transferable Warranty

Grady-White warrants to the original retail purchaser of each new Grady-White boat that, under normal use, any structural hull defects covered by the warranty and reported within five (5) years from the date of delivery to the original retail purchaser will be repaired free of charge at Grady-White's sole discretion at either an authorized Grady-White dealer location or other Grady-White approved location as elected by Grady-White. A structural hull defect is defined as a substantial defect in the boat's hull which causes the boat to be unsafe or unfit for use under normal operating conditions. Expenses for hauling out and transportation to and from the point of repair will be the responsibility of the owner. The owner will also be responsible to remove and reinstall, at their own expense, all outboard engines, (if directly related to damage in question), as well as any and all personal effects and electronics equipment. All repairs are subject to prior written authorization by Grady-White Boats, Incorporated.

The Five Year Structural Hull Warranty is transferable to the second and subsequent owners for the remainder of the five (5) years from the date of delivery to the original purchaser. There is no fee involved in the transfer of warranty to the new owner. The Grady-White Boats Used Boat Registration Form must be completed online at the time of sale. This form can be found on the Grady-White website at the following web address: https://www.gradywhite.com/explore/grady-owners/used-boat-registration/. Upon receipt of this form, Grady-White will update its records to reflect the new ownership and warranty coverage will be provided for the remainder of the five (5) years.

One Year Material And Workmanship Warranty

Grady-White further warrants to the original retail purchaser of each Grady-White boat that under normal use, defects in workmanship and material covered by the warranty and reported within one (1) year from the date of delivery to the original retail purchaser will be repaired or replaced free of charge at an authorized Grady-White dealer. Expenses for hauling out and transportation to and from the point of repair will be the responsibility of the owner with all repairs subject to prior written authorization.

Grady-White Boats, Inc. reserves the right to improve its product through changes in design or material without obligation to incorporate such changes on boats built prior to the implementation of respected change(s).

Exclusions:

This warranty specifically does not include the following:

- Damage caused by abuse, negligence, vandalism, lack of maintenance, improper storage, or accident.
- Any statements, representations, or warranties given by dealer or other third persons other than those provided within this warranty.
- Any unit which is part of a rental fleet, used for racing, or commercial purposes.
- Any unit which has been salvaged or declared a total loss.
- The following consequential damages: a) loss of time; b) inconvenience; c) towing charges; d) expenses for travel, lodging, telephone, and gasoline; e) loss or damage to personal property or loss of revenue; f) loss of use of the boat; g) storage fees for the boat.
- Equipment or accessories which are not installed by Grady-White or which carry their own individual warranties, including, but not limited to engines, propellers, controls, steering, electronics and any other part expressly warranted by the manufacturer thereof.
- Damage or deterioration of cosmetic surface finishes including gel coat cracking, crazing, blistering, discoloration, chalking or fading, chrome, plated or painted metal, aluminum and stainless steel finishes, plastics or acrylic materials, windshields, glass breakage, all vinyl upholstery and canvas, instruments and gauges, and leakage around windshields, windows, hatches, and other apertures.
- Failure of the owner to use, maintain, or store the boat as specified in the Grady-White Owner's Packet; and any other failure to provide reasonable care and maintenance. Normal wear and tear maintenance items are excluded from warranty coverage including but not limited to filters, batteries, and bungees (refer to owner's manual for additional maintenance items).
- Any Grady-White boat which has been altered or modified from Grady-White factory specifications, including penetration of the hull by anyone other than Grady-White or a Grady-White authorized dealer following Grady-White factory specified procedures.
- Any failure or defect resulting from a previous repair not authorized by Grady-White.
- Any boat which has been overpowered according to the maximum Grady-White recommended engine horsepower specifications on either the capacity plate affixed to the boat or stated in the owner's manual.

Warranty Claim Procedures

Upon the discovery of a defect, the owner is to promptly contact the Grady-White dealer from whom the original retail purchaser purchased the boat who will affect the corrective action under this warranty upon prior written authorization from Grady-White Boats, Incorporated.

THESE WARRANTIES ARE EXPRESSLY MADE IN LIEU OF ALL OTHER WARRANTIES. DURATION OF ANY IMPLIED WARRANTY OF MERCHANTABILITY OR FITNESS FOR A PARTICULAR PURPOSE OR OTHERWISE SHALL BE LIMITED TO AND COINCIDENT WITH THE DURATION OF THESE EXPRESSED WARRANTIES.